YAMAHA

PARTS CATALOGUE

YFM45FXY (3C2G) U.S.A.

1H3C2-110E1

( )

YAMAHA GENUINE Parts & Accessories

YFM45FXY
PARTS CATALOGUE
©2008 by Yamaha Motor Co., Ltd.
1st edition, June 2008
All rights reserved.
Any reprinting or unauthorized use
without the written permission of
Yamaha Motor Co., Ltd.
is expressly prohibited.
Printed in Japan.

FOREWORD

This Parts Catalogue is related to the parts for the model(s) on the cover page. When you are ordering replacement parts, please refer to this Parts Catalogue and quote both part numbers and part names correctly.

1. Modifications or additions which have been made after the issue of the Parts Catalogue will be announced in the Parts News.
   It is advisable that you make the necessary corrections to the Parts Catalogue according to the Parts News.

2. Abbreviations
   The following abbreviations are used in this Parts Catalogue.

   “UR” Use specified parts number.
   “UN” Use as many as needed.
   “AP” Alternate Parts
   “LM” Locally Made (Parts need to be ordered locally)
   “F#” Frame No. (Applicable machine No.)
   “O/S” Over Size

3. The number of components for assembly
   - Parts, which are to be supplied in an assembly, are listed with a dot (.) in front of the part name as shown below.
   - The numeral appearing to the right of each component part indicates the quantity of parts for each assembly unit.

PART NO.	DESCRIPTION	Q’TY	REMARKS
2F5–83310–60	FRONT FLASHER LIGHT ASSY	2	
115–83311–60	.BULB (6V–18W)	1	

4. Applicable colours of graphics are represented in the “REMARKS” as shown below.

PART NO.	DESCRIPTION	Q’TY	REMARKS
2N4–24110–00–X5	FUEL TANK COMP.	2	MXR
3J1–24240–10	.GRAPHIC, FUEL TANK	1	FOR MXR

5. Note that the illustrations for reference in finding parts numbers are not to be used for assembling. When assembling, please use the applicable service manual.

6. The asterisk (*) before a reference number indicates modified items after the first edition.

7. Applicable Serial No.

Engine Serial No.

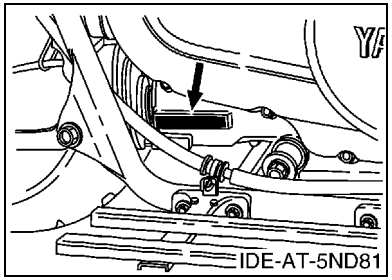

Frame Serial No.

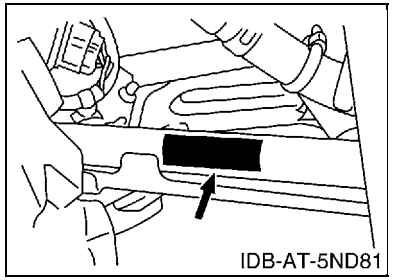

8. Applicable Colour Code (The (*) mark shows Model colour.)

Abbreviation	Colour Name	Colour Code
DPBSE(*)	DEEP PURPLISH BLUE SOLID E	0583

9. Quantity Column Information

Column No.	Name Of Q'ty Column	Destination
1	USA	U.S.A.

MODEL LABEL

(1) A label called “Model Label” is affixed in the location as indicated in (3) below.
When using this parts catalogue, please be sure to cross–reference the “model code – production code No.” in the catalogue with the “model code – production code No.” indicated on the Model Label affixed onto the product concerned.

(2) “Model Label” Indication

a b ○ xxxx – xxx ● x c	a: Model Type Code b: Production Code No. c: Colouring Type

○ 4TW1–010 ● A

(3) Model Label Affixing Location

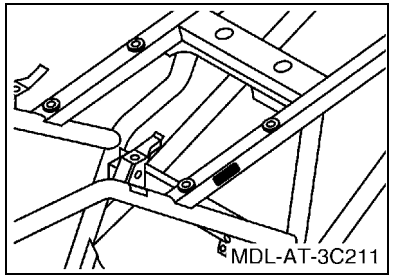

(4) Colouring Information

Model Code	Colouring Type Code	Colour Code	Colour Name	Abbreviation
3C2G	D	0583	DEEP PURPLISH BLUE SOLID E	DPBSE

(5) Model Code – Production Code Number of Model Listed in This Parts Catalogue

Model Code	Production Code No.	Country (destination)	Model Code	Production Code No.	Country (destination)
3C2G	010	U.S.A.			

CONTENTS

ENGINE

CYLINDER HEAD 1
CYLINDER 3
CRANKSHAFT & PISTON 4
VALVE 5
CAMSHAFT & CHAIN 6
WATER PUMP 7
RADIATOR & HOSE 8
OIL PUMP 9
INTAKE 10
CARBURETOR 11
EXHAUST 13
CRANKCASE 14
CRANKCASE COVER 1 16
STARTER CLUTCH 18
CLUTCH 19
TRANSMISSION 21
MIDDLE DRIVE GEAR 22
SHIFT CAM & FORK 24
SHIFT SHAFT 25

CHASSIS

FRAME 26
FRONT FENDER 28
REAR FENDER 29
SIDE COVER 30
REAR ARM 31
DRIVE SHAFT 32
FRONT DIFFERENTIAL 35
REAR SUSPENSION 37
FRONT SUSPENSION & WHEEL 38
STEERING 39
FUEL TANK 40
SEAT 41
FRONT WHEEL 42
FRONT BRAKE CALIPER 45
REAR WHEEL 46
REAR BRAKE CALIPER 47
STEERING HANDLE & CABLE 48
FRONT MASTER CYLINDER 49
STAND & FOOTREST 50
REAR MASTER CYLINDER 51
GUARD 53
GENERATOR 54
STARTING MOTOR 55
METER 56
HEADLIGHT 57
TAILLIGHT 58
HANDLE SWITCH & LEVER 59
ELECTRICAL 1 60
GRAPHICS 63
EMBLEM & LABEL 1 64

INDEX

NUMERICAL INDEX 65

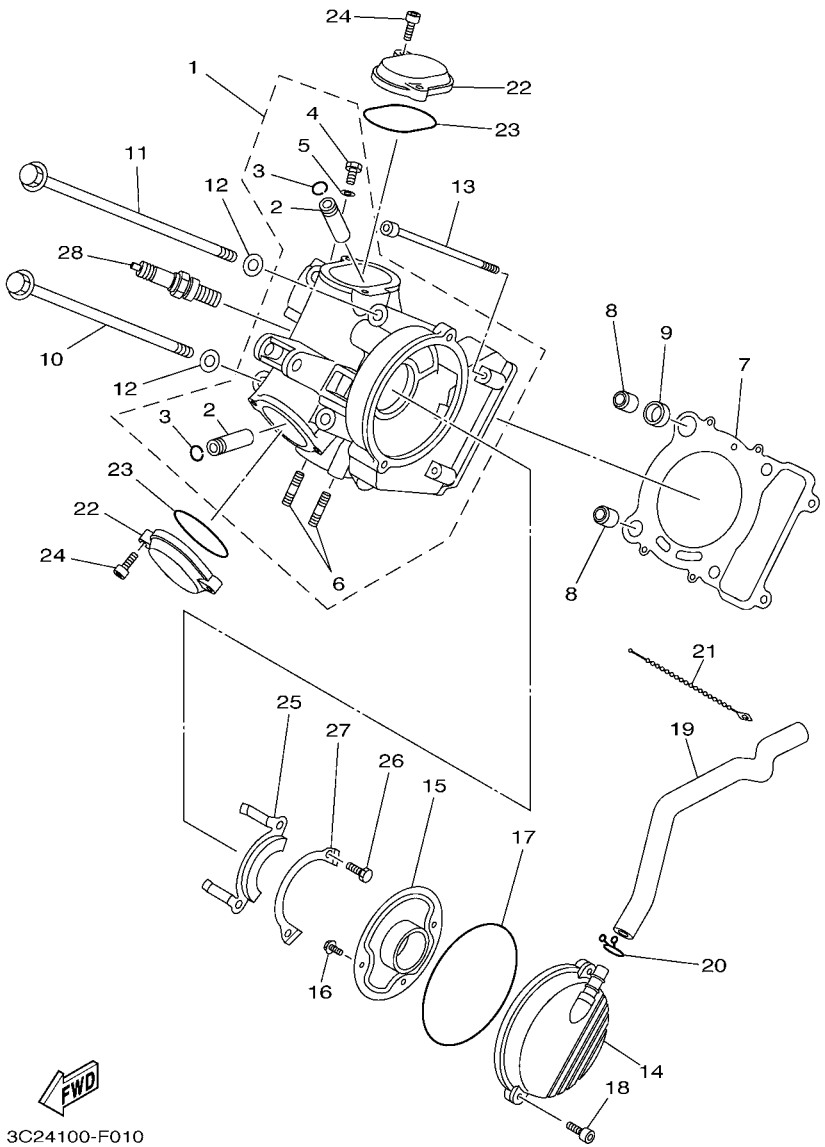

FIG. 1 CYLINDER HEAD

REF. NO.	PART NO.	DESCRIPTION	USA					REMARKS
1	5GH–11110–00	CYLINDER HEAD ASSY	1					
2	3Y1–11133–11	.GUIDE, VALVE 1	2					
3	93440–12052	.CIRCLIP	2					
4	90401–06001	.BOLT, UNION	1					
5	90430–06192	.GASKET	1					
6	95617–08620	.BOLT, STUD	2					
7	5GH–11181–00	GASKET, CYLINDER HEAD 1	1					
8	99530–14016	PIN, DOWEL	2					
9	90430–14240	GASKET	1					
10	90105–10137	BOLT, FLANGE	2					
11	90105–10136	BOLT, FLANGE	2					
12	90201–10128	WASHER, PLATE	4					
13	91312–06140	BOLT	2					
14	4WU–11160–01	BREATHER ASSY	1					
15	4KB–11165–00	PLATE, BREATHER	1					
16	95022–06012	BOLT, FLANGE	2					
17	93211–06635	O-RING	1					
18	91312–06025	BOLT	2					
19	3C2–E1166–00	PIPE, BREATHER 1	1					
20	90467–140A4	CLIP	1					
21	90464–39800	CLAMP	1					
22	2NL–11186–12	COVER, CYLINDER HEAD SIDE 2	2					
23	93210–57634	O-RING	2					
24	91312–06020	BOLT	4					
25	5GH–1111F–00	PLATE	1					
26	97002–06012	BOLT	2					
27	90215–06003	WASHER, LOCK	1					

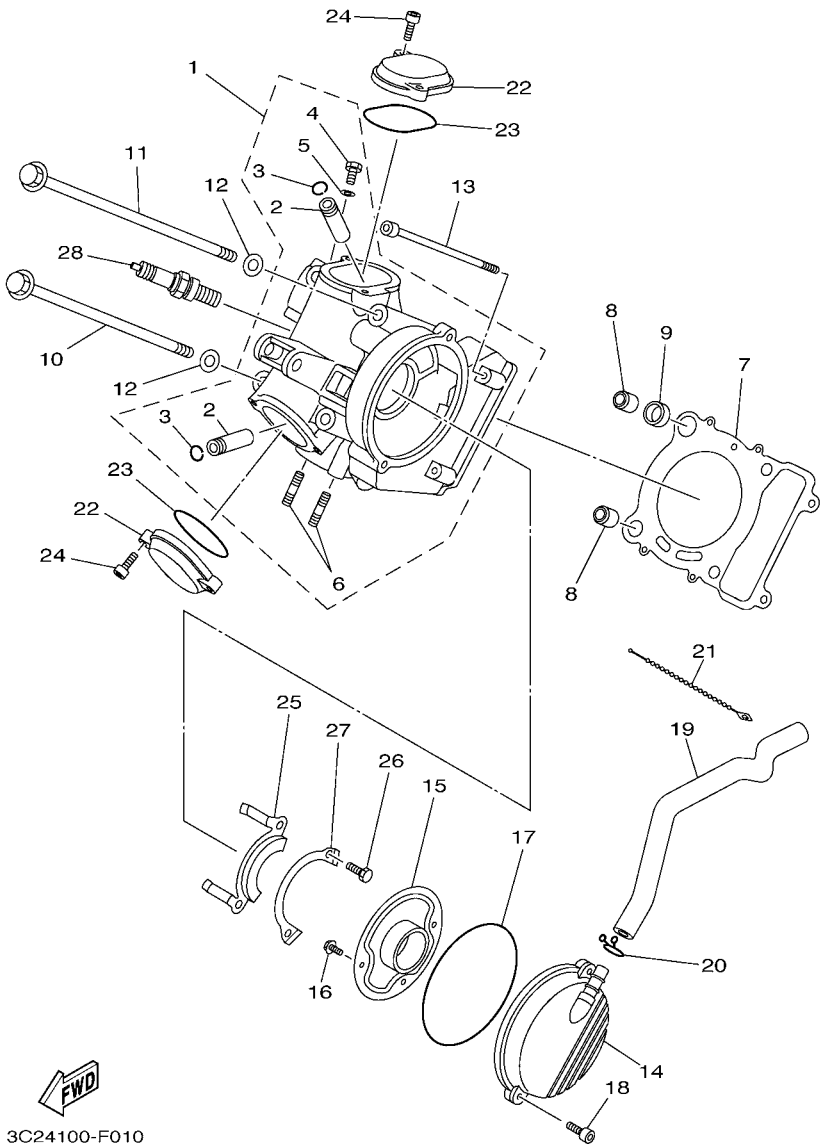

FIG. 1 CYLINDER HEAD

REF. NO.	PART NO.	DESCRIPTION	USA					REMARKS
28	94701–00333	PLUG, SPARK (NGK DR8EA)	1					

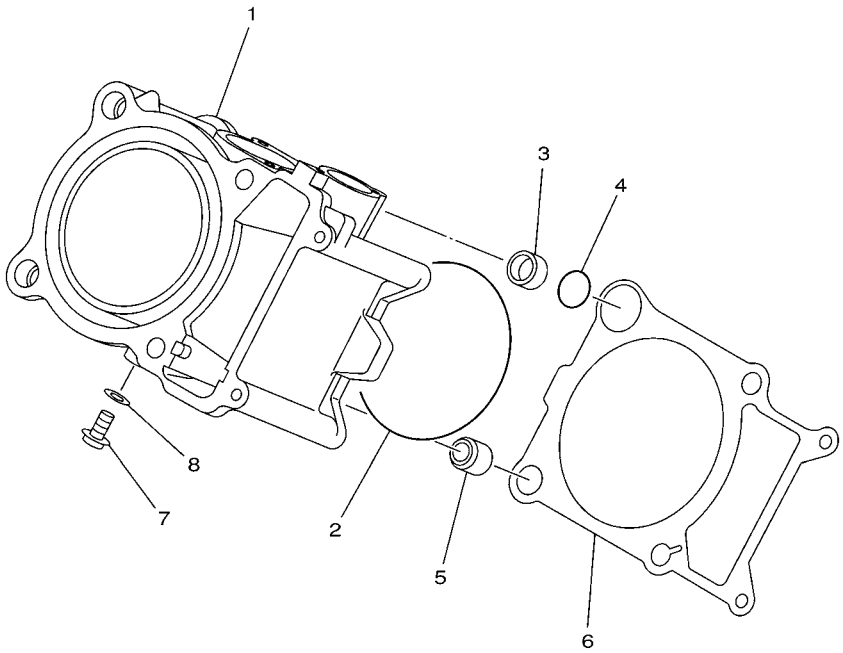

5GH1110-0020

FIG. 2 CYLINDER

REF. NO.	PART NO.	DESCRIPTION	USA					REMARKS
1	5ND–11310–00	CYLINDER	1					
2	93210–89447	O-RING	1					
3	90387–16547	COLLAR	1					
4	93210–18322	O-RING	1					
5	99530–14016	PIN, DOWEL	1					
6	5GH–11351–00	GASKET, CYLINDER	1					
7	90153–06002	SCREW, HEXAGON	1					
8	90430–06014	GASKET	1					

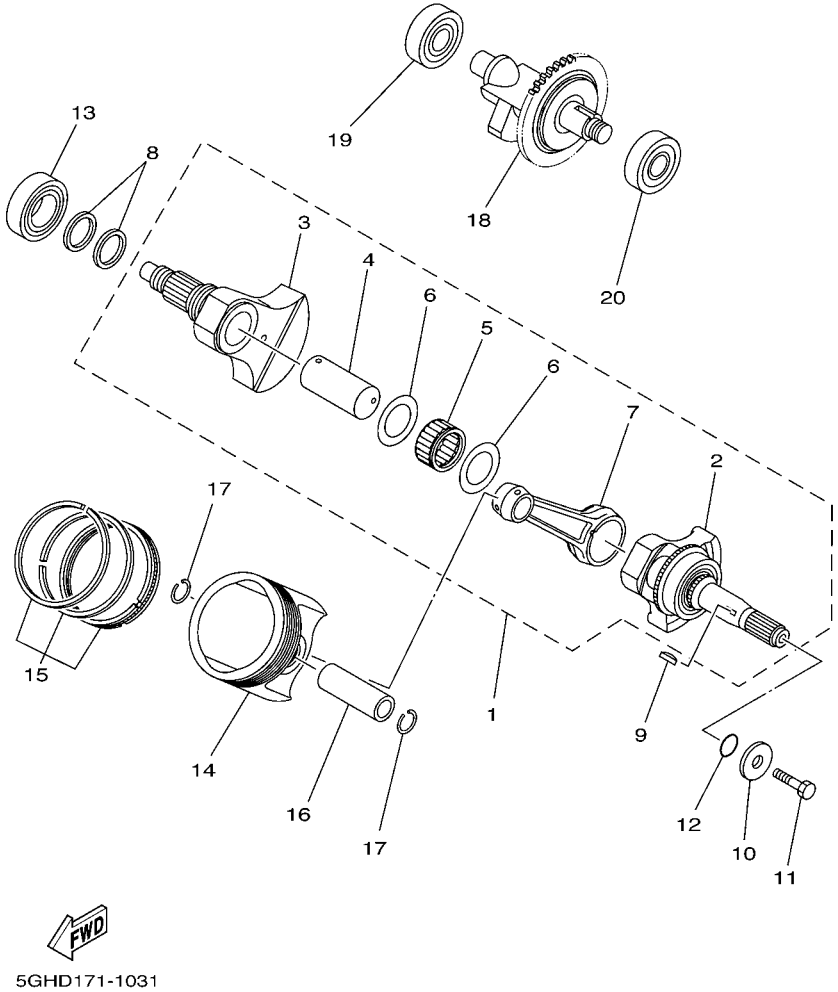

FIG. 3 CRANKSHAFT & PISTON

REF. NO.	PART NO.	DESCRIPTION	USA					REMARKS
1	5ND–11400–00	CRANKSHAFT ASSY	1					
2	5ND–W1141–00	.CRANK SUB ASSY 1	1					
3	5ND–W1142–00	.CRANK SUB ASSY 2	1					
4	5GH–11681–00	.PIN, CRANK 1	1					
5	93310–635D4	.BEARING	1					
6	90201–356K1	.WASHER, PLATE	2					
7	5GH–11651–01	.ROD, CONNECTING	1					
8	5GH–11447–00	SEAL, CRANK	2					
9	90280–05048	KEY, WOODRUFF	1					
10	90201–10038	WASHER, PLATE	1					
11	90101–10017	BOLT	1					
12	93210–16290	O-RING	1					
13	93306–30629	BEARING	1					
14	5ND–11631–00	PISTON (STD)	1					
	5ND–11636–00	PISTON (0.50MM O/S)	1					AP
	5ND–11638–00	PISTON (1.00MM O/S)	1					AP
15	5ND–11603–00	PISTON RING SET (STD)	1					
	5ND–11605–00	PISTON RING SET (0.50MM O/S)	1					AP
	5ND–11607–00	PISTON RING SET (1.00MM O/S)	1					AP
16	3LD–11633–00	PIN, PISTON	1					
17	93450–22027	CIRCLIP	2					
18	5ND–11500–00	BALANCER ASSY	1					
19	93306–30315	BEARING	1					
20	93306–30438	BEARING	1					

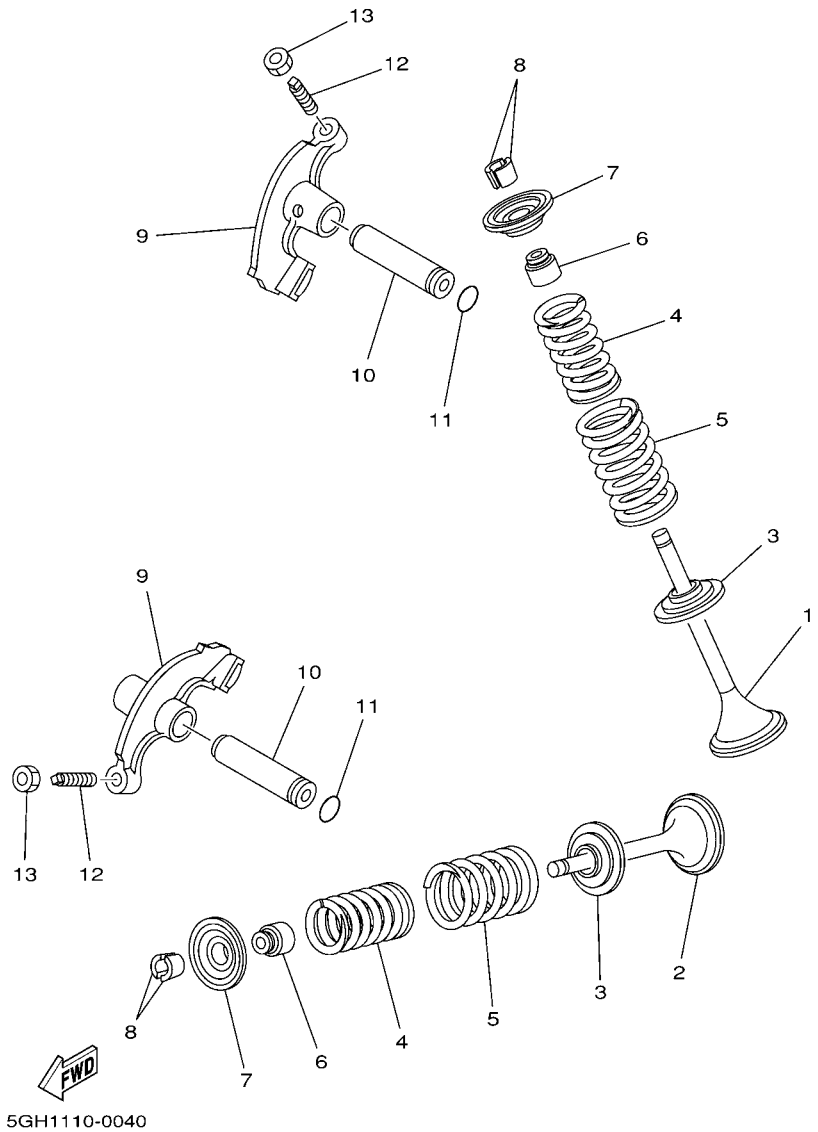

FIG. 4 VALVE

REF. NO.	PART NO.	DESCRIPTION	USA					REMARKS
1	5GH–12111–00	VALVE, INTAKE	1					
2	5GH–12121–00	VALVE, EXHAUST	1					
3	3Y1–12116–00	SEAT, VALVE SPRING	2					
4	22U–12113–00	SPRING, VALVE INNER	2					
5	1UY–12114–01	SPRING, VALVE OUTER	2					
6	M01–12129–00	SEAL, VALVE STEM	2					
7	3Y1–12117–01	RETAINER, VALVE SPRING	2					
8	1J7–12118–00	COTTER, VALVE	4					
9	3GD–12151–00	ARM, VALVE ROCKER	2					
10	3Y1–12156–00	SHAFT, ROCKER 2	2					
11	93210–09165	O-RING	2					
12	31G–12159–02	SCREW, VALVE ADJUSTING	2					
13	31G–12158–00	NUT, LOCK	2					

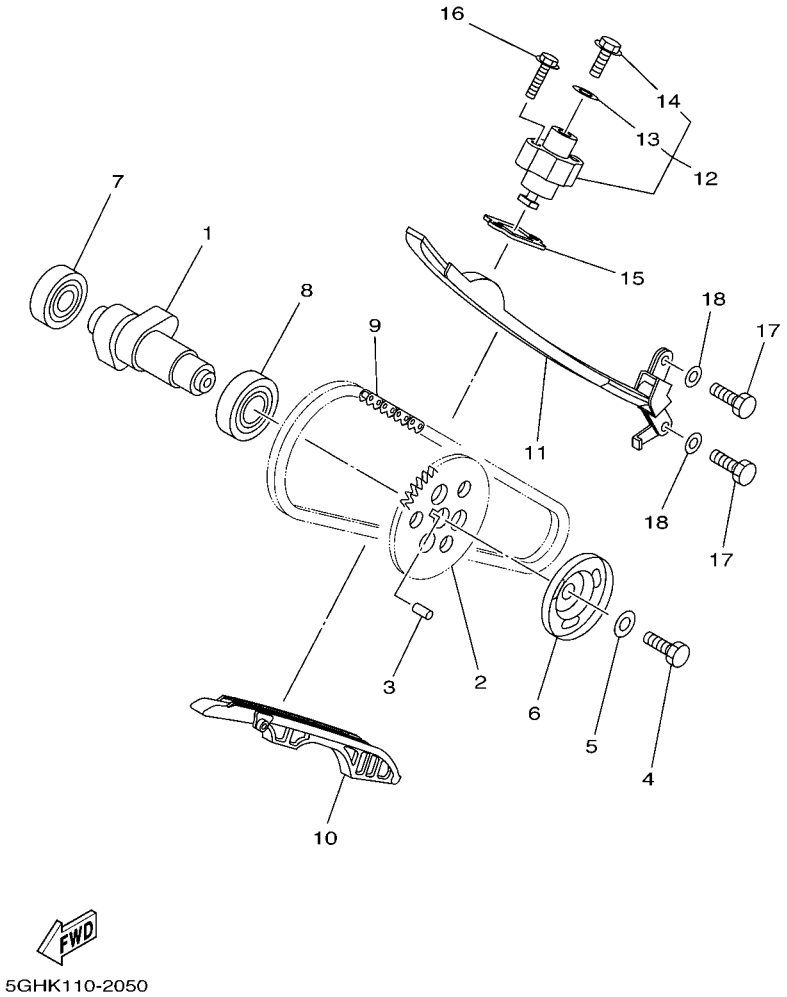

FIG. 5 CAMSHAFT & CHAIN

REF. NO.	PART NO.	DESCRIPTION	USA					REMARKS
1	5GH–12171–00	CAMSHAFT 1	1					
2	5GH–12176–10	SPROCKET, CAM CHAIN	1					
3	93604–10011	PIN, DOWEL	1					
4	90101–10016	BOLT	1					
5	90201–10591	WASHER, PLATE	1					
6	4KB–11145–00	PLATE, BREATHER 2	1					
7	93306–00438	BEARING	1					NIHONSEIKO
8	93306–00515	BEARING	1					
9	94582–20116	CHAIN (DID SCR-0409 SV 116LE)	1					
10	5GH–12231–10	GUIDE, STOPPER 1	1					
11	5GH–12241–00	GUIDE, STOPPER 2	1					
12	31G–12210–01	TENSIONER ASSY, CAM CHAIN	1					
13	31G–12214–00	.GASKET	1					
14	31G–12222–00	.PLUG	1					
15	3GD–12213–00	GASKET, TENSIONER CASE	1					
16	95022–06025	BOLT, FLANGE	2					
17	97022–06016	BOLT	2					
18	92902–06600	WASHER, PLATE	2					

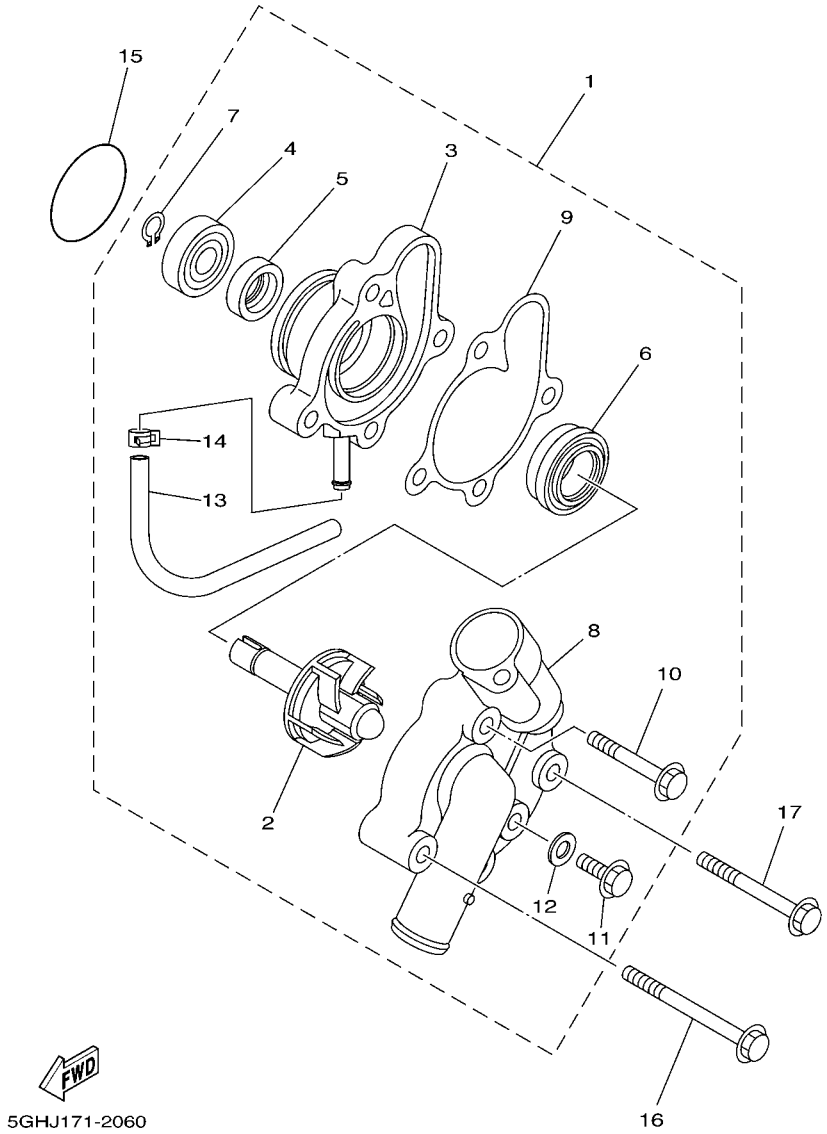

FIG. 6 WATER PUMP

REF. NO.	PART NO.	DESCRIPTION	USA					REMARKS
1	5GH–12420–01	WATER PUMP ASSY	1					
2	5CG–12450–00	.IMPELLER SHAFT ASSY	1					
3	5GH–12421–01	.HOUSING, WATER PUMP	1					
4	93306–00006	.BEARING	1					
5	93101–10090	.OIL SEAL	1					
6	11H–12438–10	.SEAL, MECHANICAL	1					
7	99009–10400	.CIRCLIP	1					
8	5GH–12422–00	.COVER, HOUSING	1					
9	5GH–12428–00	.GASKET, HOUSING COVER 2	1					
10	90105–06086	.BOLT, FLANGE	2					
11	95022–06012	.BOLT, FLANGE	1					
12	90430–06014	.GASKET	1					
13	90446–06001	.HOSE (L300)	1					
14	90467–06194	.CLIP	1					
15	93210–33133	O-RING	1					
16	95022–06060	BOLT, FLANGE	1					
17	95022–06050	BOLT, FLANGE	1					

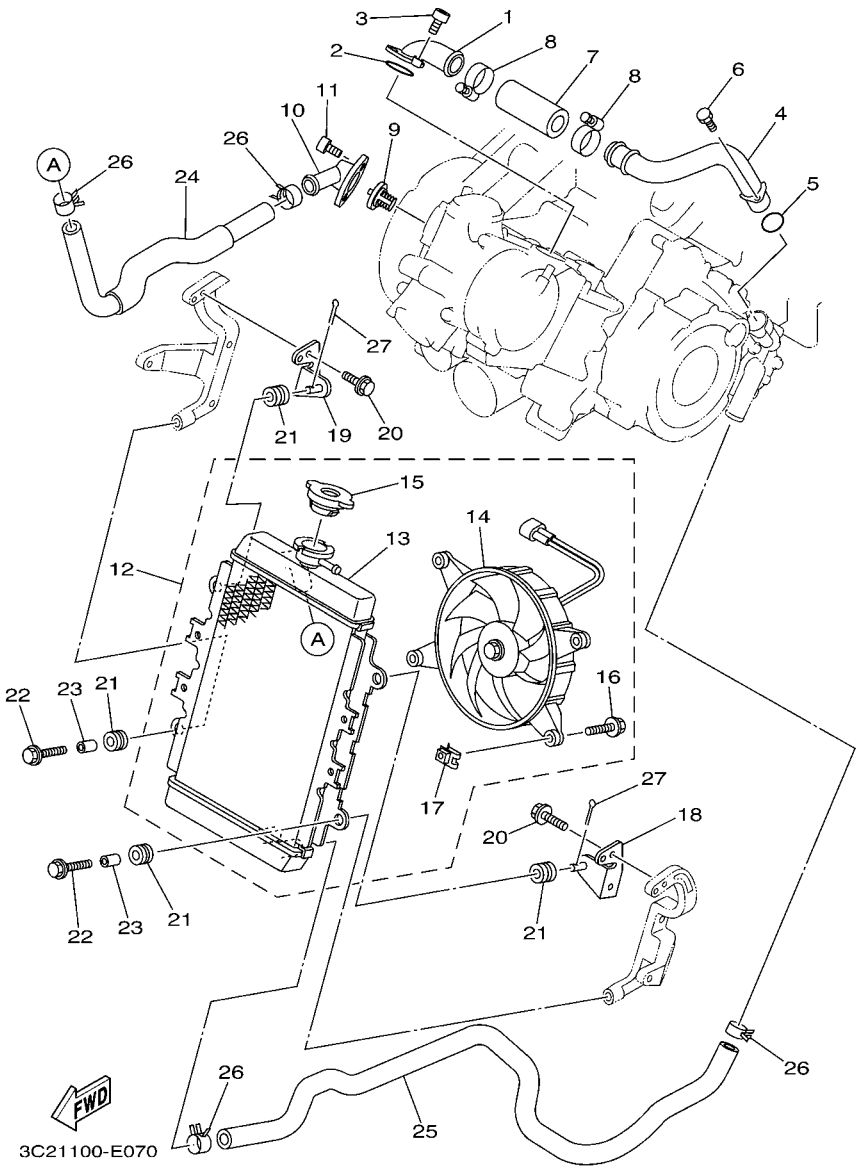

FIG. 7 RADIATOR & HOSE

REF. NO.	PART NO.	DESCRIPTION	USA					REMARKS
1	5GH–12446–00	JOINT	1					
2	93210–33786	O-RING	1					
3	90110–06189	BOLT, HEXAGON SOCKET HEAD	2					
4	5GH–12484–00	PIPE 4	1					
5	93210–18417	O-RING	1					
6	91312–06012	BOLT	1					
7	5GH–12481–00	PIPE 1	1					
8	90450–32015	HOSE CLAMP ASSY	2					
9	2TV–12411–00	THERMOSTAT	1					
10	5GH–12413–00	COVER, THERMOSTAT	1					
11	91312–06020	BOLT	2					
12	3C2–E2460–00	RADIATOR ASSY	1					
13	3C2–E2461–00	.RADIATOR ASSY	1					
14	5ND–E2405–01	.BLOWER ASSY	1					
15	5ND–E2462–00	.CAP, RADIATOR	1					
16	5ND–E2675–00	.BOLT, BLOWER HOLDING	4					
17	5ND–E2535–00	.PLATE	4					
18	3C2–F142M–00	BRACKET, RADIATOR 3	1					
19	3C2–F142N–00	BRACKET, RADIATOR	1					
20	95812–06014	BOLT, FLANGE	2					
21	90480–15235	GROMMET	4					
22	95802–06025	BOLT, FLANGE	2					
23	90387–072Y2	COLLAR	2					
24	3C2–E2482–00	PIPE 2	1					
25	3C2–E2483–00	PIPE 3	1					
26	90467–26800	CLIP	4					
27	90468–18121	CLIP	2					

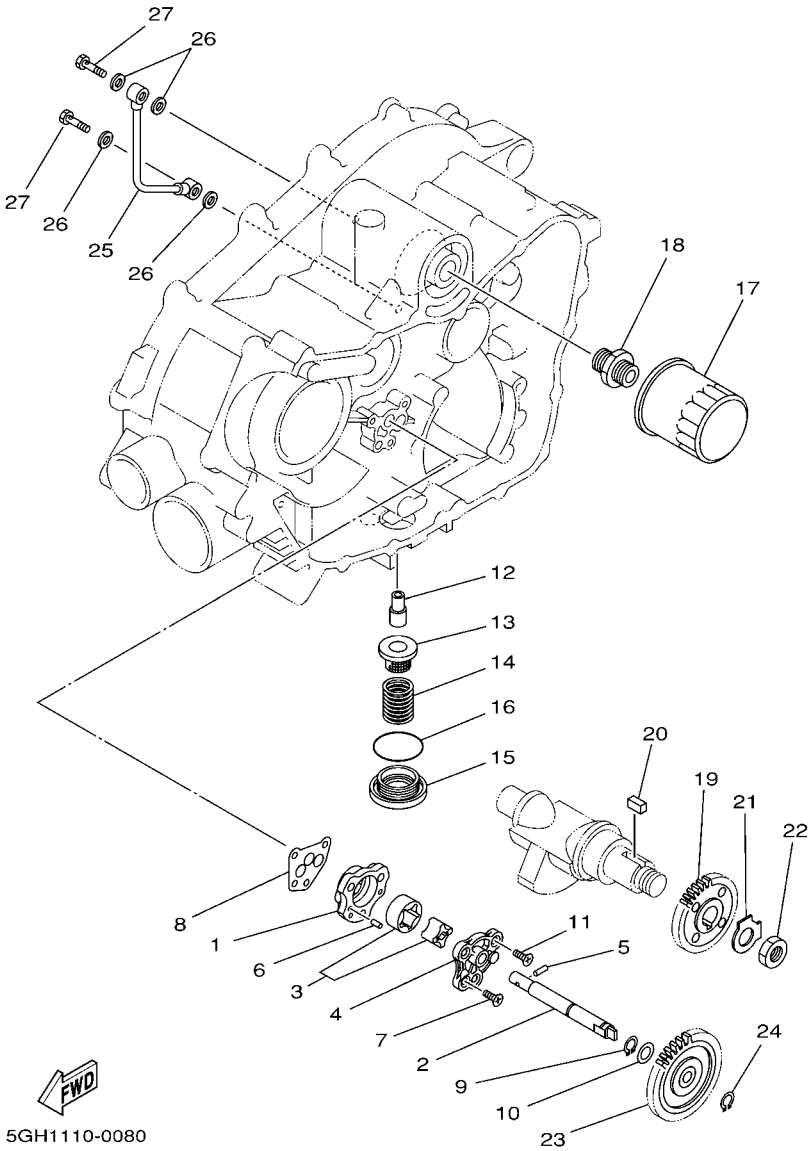

FIG. 8 OIL PUMP

REF. NO.	PART NO.	DESCRIPTION	USA					REMARKS
1	1UY–13336–00	HOUSING, ROTOR	1					
2	5GH–13314–00	SHAFT, PUMP	1					
3	3Y1–13310–01	ROTOR ASSY 1	1					
4	1UY–13316–00	COVER, PUMP	1					
5	93603–12030	PIN, DOWEL	1					
6	93603–07073	PIN, DOWEL	2					
7	98702–06020	SCREW, FLAT HEAD	1					
8	3GD–13329–00	GASKET, PUMP COVER	1					
9	99009–11400	CIRCLIP	1					
10	90201–114P2	WASHER, PLATE (1.0)	1					
11	98702–06030	SCREW, FLAT HEAD	3					
12	2XK–13416–00	PIPE, OIL 1	1					
13	51Y–13411–00	STRAINER, OIL	1					
14	90501–18576	SPRING, COMPRESSION	1					
15	4HC–15351–00	PLUG, DRAIN	1					
16	93210–35520	O-RING	1					
17	5GH–13440–20	ELEMENT ASSY, OIL CLEANER	1					
18	90401–20145	BOLT, UNION	1					
19	5GH–13324–00	GEAR, PUMP DRIVE	1					
20	90282–05013	KEY, STRAIGHT	1					
21	90215–14205	WASHER, LOCK	1					
22	90170–14284	NUT	1					
23	5GH–13325–00	GEAR, PUMP DRIVEN	1					
24	99009–11400	CIRCLIP	1					
25	4KB–13161–01	PIPE, DELIVERY 1	1					
26	90430–08119	GASKET	4					
27	90401–08006	BOLT, UNION	2					

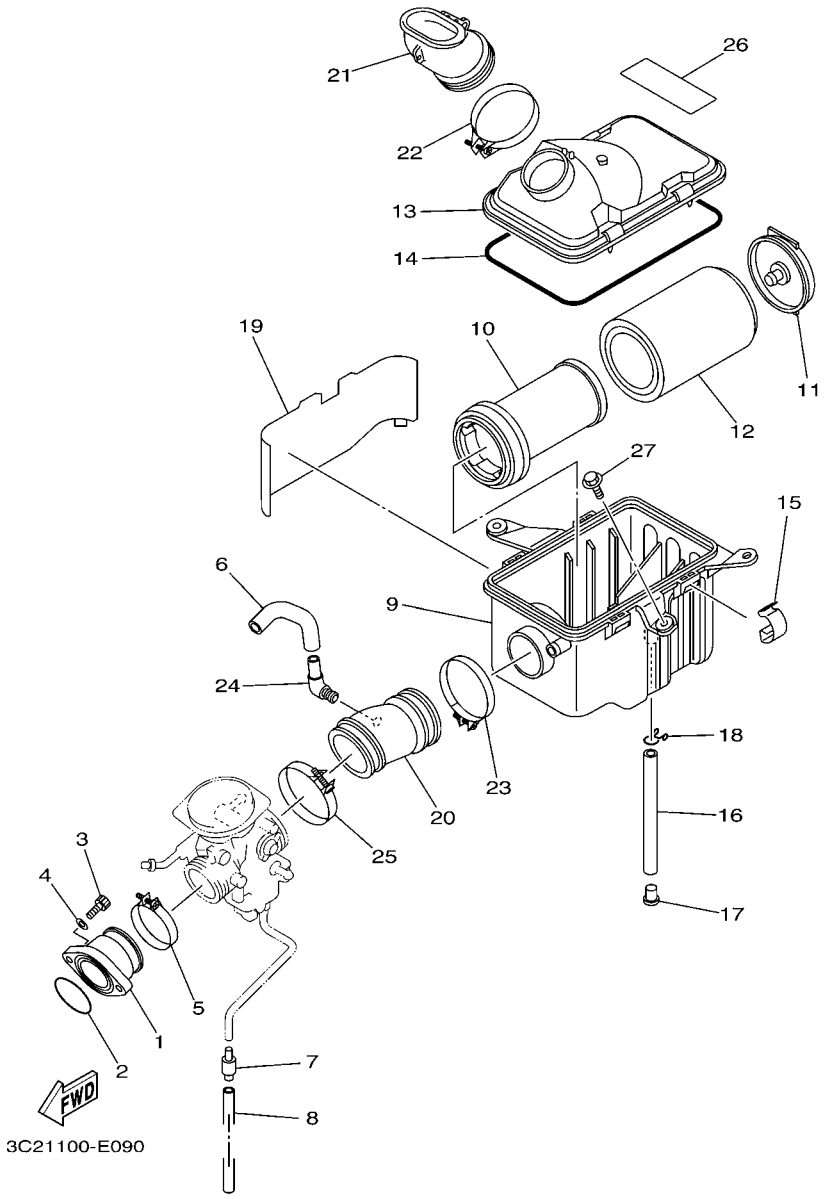

FIG. 9 INTAKE

REF. NO.	PART NO.	DESCRIPTION	USA					REMARKS
1	5GH–13586–00	JOINT, CARBURETOR 1	1					
2	93210–44545	O-RING	1					
3	91312–08025	BOLT	2					
4	90201–08070	WASHER, PLATE	2					
5	90450–47002	HOSE CLAMP ASSY	1					
6	5ND–E4349–00	PIPE	1					
7	24W–14193–00	PIPE	1					
8	91A20–07010	TUBE, FLEXIBLE VINYL	1					
9	5UH–E4411–00	CASE, AIR CLEANER 1	1					
10	5UH–E4458–00	GUIDE	1					
11	5UH–E4468–00	PLATE,ELEMENT FITTING	1					
12	5UH–E4451–10	ELEMENT, AIR CLEANER	1					
13	5UH–E4412–00	CAP, CLEANER CASE 1	1					
14	5UH–E4462–00	SEAL	1					
15	5UH–E4424–00	CLIP, CAP FITTING	4					
16	5UH–E4769–10	PIPE, DRAIN	1					
17	5UH–E4191–00	PLUG, DRAIN	1					
18	5UH–E4438–00	CLIP, DRAIN CLEANER	1					
19	5ND–E442F–00	PROTECTOR	1					
20	5ND–E4453–00	JOINT, AIR CLEANER 1	1					
21	5ND–E4437–02	DUCT	1					
22	90450–58002	HOSE CLAMP ASSY	1					
23	90450–58002	HOSE CLAMP ASSY	1					
24	31A–14419–00	PIPE	1					
25	90450–56008	HOSE CLAMP ASSY	1					
26	37S–2177C–00	PLATE, EPA OFFROAD ATV 1	1					
27	90119–06246	BOLT, WITH WASHER	2					

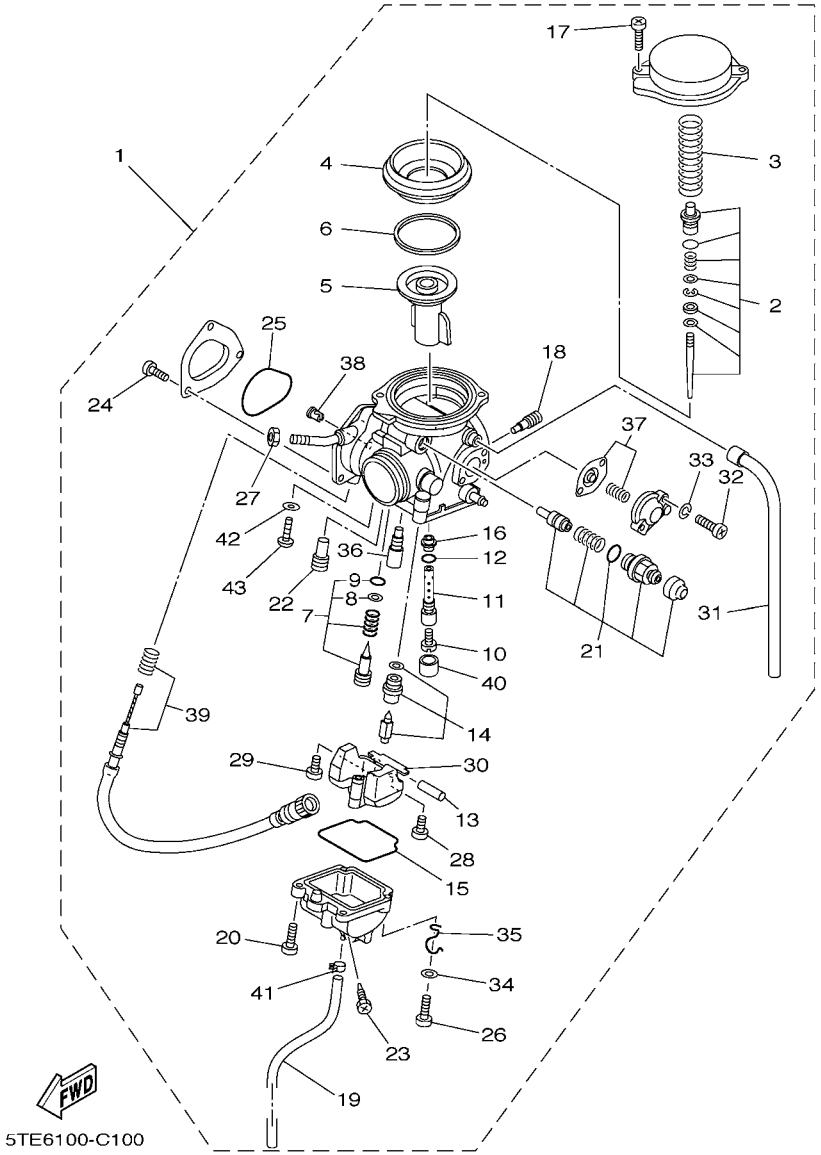

FIG. 10 CARBURETOR

REF. NO.	PART NO.	DESCRIPTION	USA					REMARKS
1	5ND–E4101–11	CARBURETOR ASSY 1	1					
2	5ND–1490J–10	.NEEDLE SET	1					
3	5DM–14933–00	.SPRING, DIAPHRAGM	1					
4	5GH–14940–10	.DIAPHRAGM ASSY	1					
5	5DM–14112–00	.VALVE, THROTTLE 1	1					
6	5GH–14918–10	.RING	1					
7	5ND–14105–00	.PILOT SCREW SET	1					
8	3H1–14962–00	..WASHER	1					
9	3H1–14147–00	..O-RING	1					
10	3G2–1423E–52	.JET, MAIN (#131.3)	1					
11	5GH–14261–00	.HOLDER	1					
12	583–14561–00	.O-RING	1					
13	127–14186–00	.PIN, FLOAT	1					
14	5UH–14107–20	.NEEDLE VALVE SET	1					
15	5DM–14561–00	.O-RING	1					
16	5DM–14141–40	.NOZZLE, MAIN	1					
17	4KM–14216–00	.SCREW	2					
18	1HX–14231–16	.JET, MAIN (# 80)	1					
19	4KB–14193–20	.PIPE	1					
20	98580–04010	.SCREW, PAN HEAD	3					
21	5ND–1410A–00	.STARTER SET	1					
22	3G2–14231–14	.JET,PILOT AIR(#70)	1					
23	3FV–14191–00	.PLUG, DRAIN	1					
24	9850L–04006	.SCREW, PAN HEAD	3					
25	5FU–E4147–00	.O-RING	1					
26	98507–04014	.SCREW, PAN HEAD	1					
27	522–14161–00	.NUT, CABLE ADJUSTING	1					

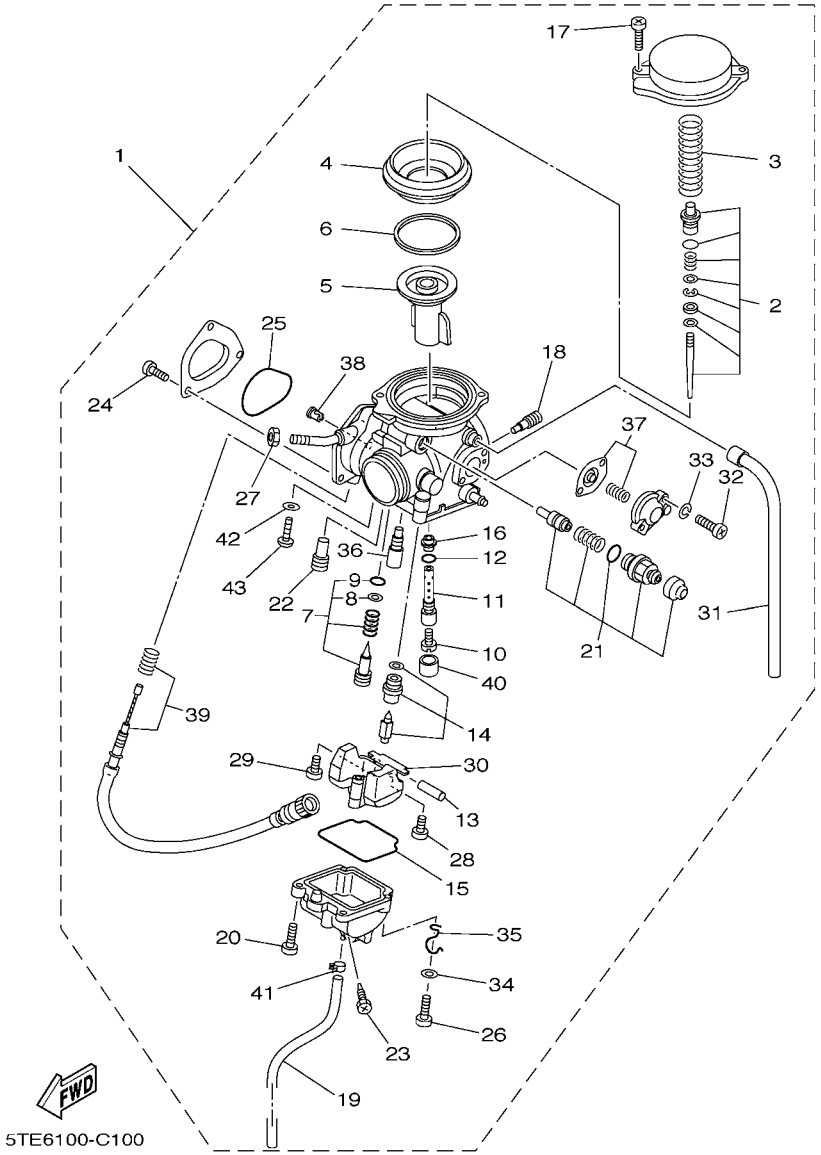

FIG. 10 CARBURETOR

REF. NO.	PART NO.	DESCRIPTION	USA					REMARKS
28	98507–04008	.SCREW, PAN HEAD	1					
29	1FN–14565–00	.SCREW	1					
30	5DM–14985–00	.FLOAT	1					
31	5GH–14197–00	.PIPE	1					
32	98501–04014	.SCREW, PAN HEAD	2					
33	92902–04100	.WASHER, SPRING	2					
34	92907–04600	.WASHER	1					
35	5GH–14937–00	.CLIP	1					
36	4KM–14142–17	.JET, PILOT (# 17.5)	1					
37	5ND–1490H–00	.DIAPHRAGM SET 5	1					
38	5FU–E4155–00	.GUIDE, CABLE	1					
39	5GH–14103–01	.THROTTLE SCREW SET	1					
40	5GH–14918–00	.RING	1					
41	4XE–14937–00	.CLIP	1					
42	256–14956–01	.WASHER	1					
43	3DM–14216–00	.SCREW	1					

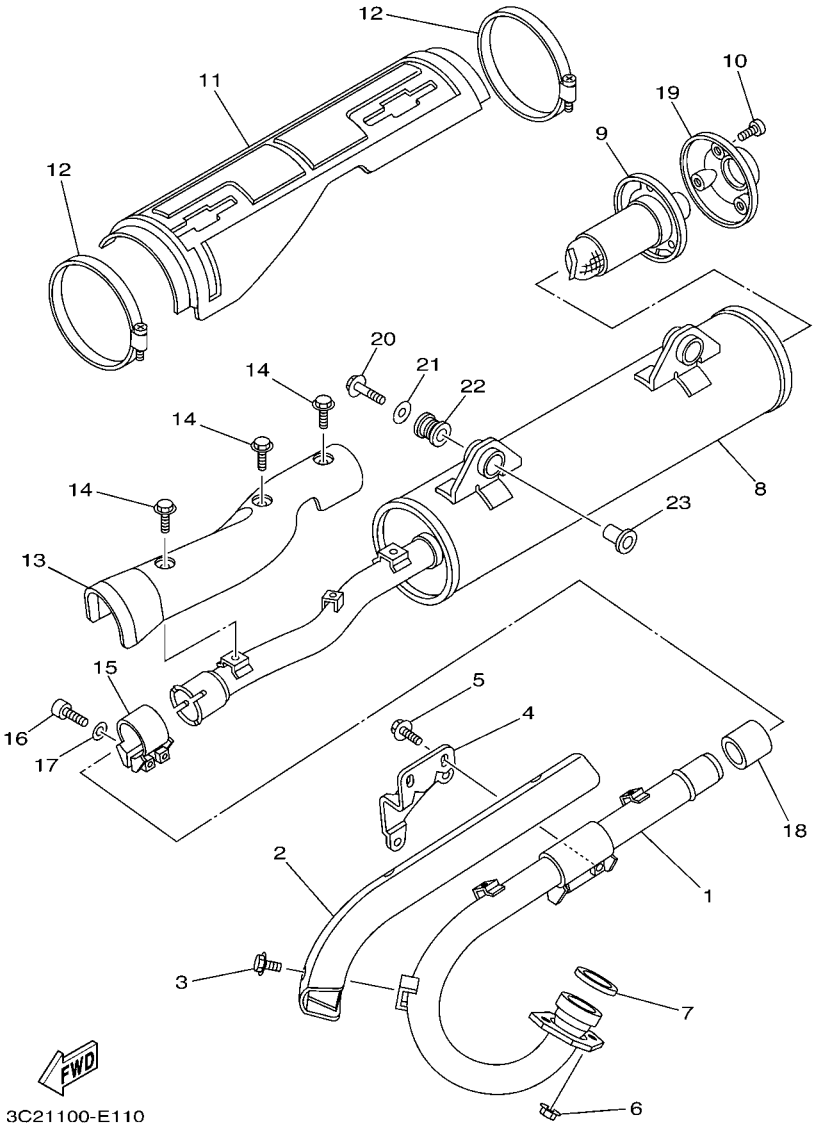

FIG. 11 EXHAUST

REF. NO.	PART NO.	DESCRIPTION	USA					REMARKS
1	5ND–E4611–00	PIPE, EXHAUST 1	1					
2	5ND–E4628–00	PROTECTOR, EXHAUST PIPE	1					
3	9581P–06008	BOLT, FLANGE	3					
4	5ND–E477K–02	PLATE 1	1					
5	95812–06016	BOLT, FLANGE	2					
6	90179–08410	NUT	2					
7	3GD–14613–00	GASKET, EXHAUST PIPE	1					
8	5ND–E4711–00	MUFFLER 1	1					
9	3C2–E4752–00	PIPE, OUTLET	1					
10	5ND–E4719–00	BOLT, MUFFLER	3					
11	5ND–E4718–00	PROTECTOR, MUFFLER 1	1					
12	5ND–E4788–00	BAND, SILENCER	2					
13	5ND–E4728–00	PROTECTOR, MUFFLER 2	1					
14	9581P–06008	BOLT, FLANGE	3					
15	5ND–E4715–00	BAND, MUFFLER	1					
16	5ND–E4777–00	BOLT	2					
17	5ND–E4759–00	WASHER	2					
18	5ND–E4714–00	GASKET, MUFFLER	1					
19	3C2–E4787–00	CAP, SILENCER	1					
20	95822–10040	BOLT, FLANGE	2					
21	90201–10056	WASHER, PLATE	2					
22	5ND–E4737–00	DAMPER, MUFFLER	2					
23	90387–10636	COLLAR	2					

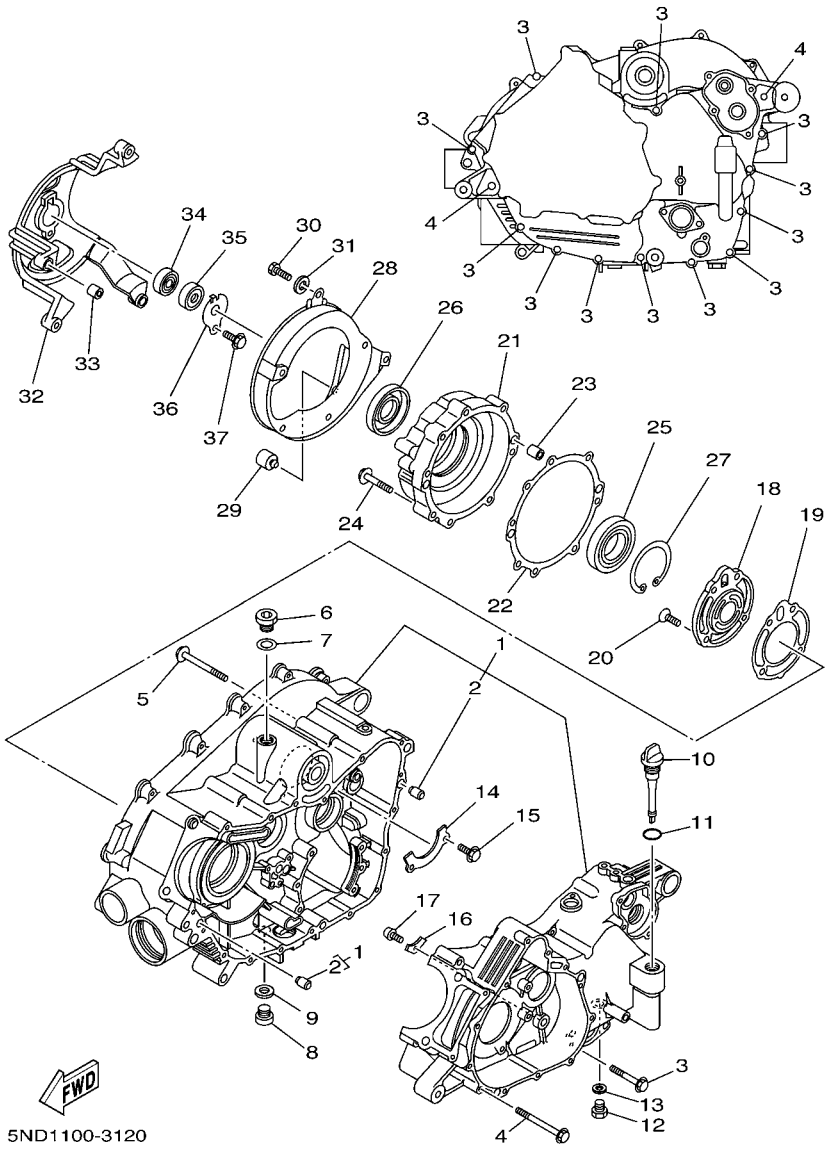

FIG. 12 CRANKCASE

REF. NO.	PART NO.	DESCRIPTION	USA					REMARKS
1	3C2–15100–02	CRANKCASE ASSY	1					
2	99530–10114	.PIN, DOWEL	2					
3	95022–06040	BOLT, FLANGE	12					
4	95022–06065	BOLT, FLANGE	2					
5	95022–06065	BOLT, FLANGE	3					
6	90340–18003	PLUG, STRAIGHT SCREW	1					
7	90430–18130	GASKET	1					
8	90340–14002	PLUG, STRAIGHT SCREW	1					
9	214–11198–01	GASKET	1					
10	5GH–15362–00	PLUG, OIL LEVEL	1					
11	93210–19026	O-RING	1					
12	90340–14029	PLUG, STRAIGHT SCREW	1					
13	214–11198–01	GASKET	1					
14	5GH–15388–00	PLATE, BEARING COVER	1					
15	95822–06012	BOLT, FLANGE	2					
16	2K7–15383–00	PLATE, BEARING COVER	1					
17	90151–06023	SCREW, COUNTERSUNK	1					
18	5GH–15414–00	COVER, AIR CLEANER	1					
19	5GH–15454–00	GASKET 1	1					
20	98702–06020	SCREW, FLAT HEAD	4					
21	5GH–15163–00	HOUSING, BEARING 1	1					
22	5GH–15463–00	GASKET, COVER PINION 2	1					
23	99530–10114	PIN, DOWEL	2					
24	95022–06040	BOLT, FLANGE	8					
25	93316–01003	BEARING	1					
26	93102–32483	OIL SEAL	1					
27	99009–80500	CIRCLIP	1					

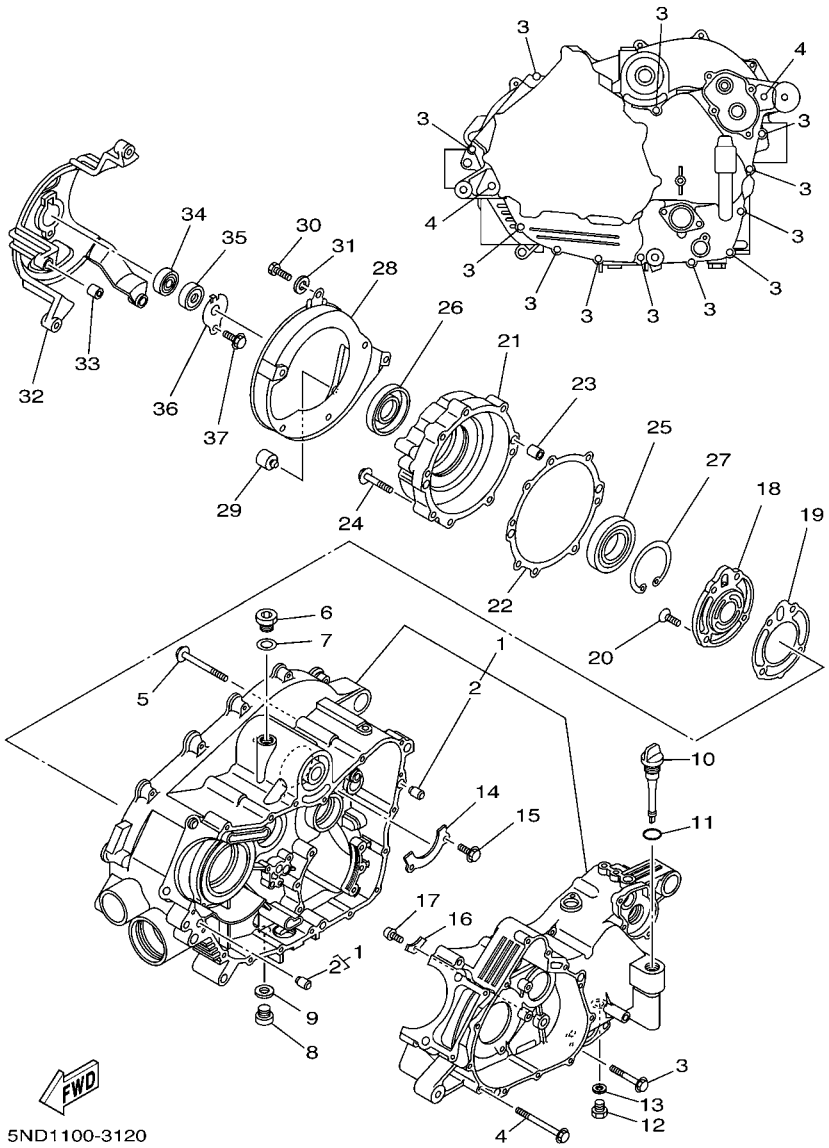

FIG. 12 CRANKCASE

REF. NO.	PART NO.	DESCRIPTION	USA					REMARKS
28	5GH–15333–00	COVER	1					
29	5GH–15338–00	DAMPER 5	1					
30	97012–06016	BOLT	6					
31	92902–06600	WASHER, PLATE	6					
32	5GH–15442–01	HOUSING, BEARING	1					
33	91810–20001	PIN, DOWEL	2					
34	93306–20120	BEARING	1					
35	93101–12168	OIL SEAL	1					
36	4WV–15381–00	PLATE, BEARING COVER	1					
37	95022–06012	BOLT, FLANGE	1					

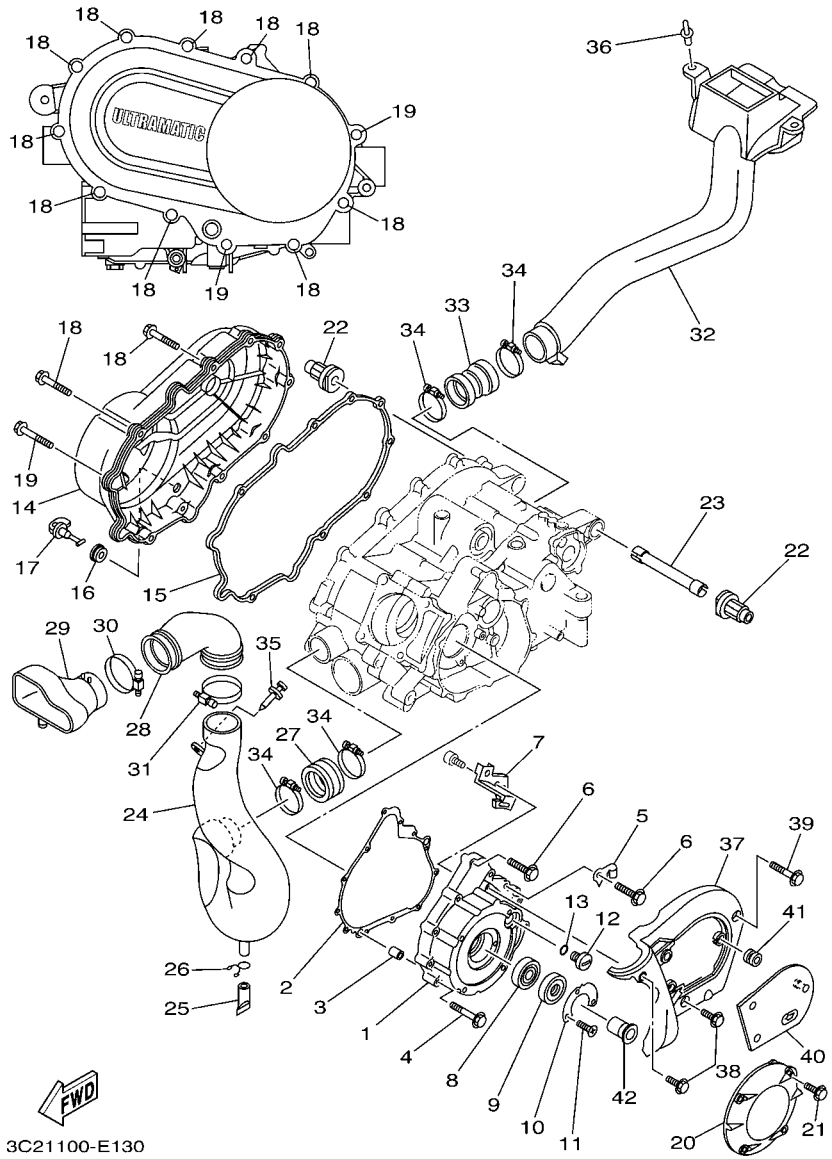

FIG. 13 CRANKCASE COVER 1

REF. NO.	PART NO.	DESCRIPTION	USA					REMARKS
1	5GH–15411–01	COVER, CRANKCASE 1	1					
2	5GH–15451–00	GASKET, CRANKCASE COVER 1	1					
3	99530–10114	PIN, DOWEL	2					
4	95022–06040	BOLT, FLANGE	8					
5	90465–08127	CLAMP	1					
6	95022–06030	BOLT, FLANGE	4					
7	5GH–15113–00	PLATE	1					
8	93306–07801	BEARING	1					
9	93102–28476	OIL SEAL	1					
10	21V–15719–00	WASHER, THRUST	1					
11	90151–05023	SCREW, COUNTERSUNK	2					
12	90340–14117	PLUG, STRAIGHT SCREW	1					
13	93210–14369	O-RING	1					
14	5ND–15431–00	COVER, CRANKCASE 3	1					
15	5GH–15379–00	SEAL, CRANKCASE	1					
16	90480–13018	GROMMET	1					
17	5KM–15351–00	PLUG, DRAIN	1					
18	95822–06035	BOLT, FLANGE	10					
19	95822–06045	BOLT, FLANGE	2					
20	3C2–15492–00	COVER	1					
21	95022–06025	BOLT, FLANGE	4					
22	5ND–E5336–00	DAMPER, ENGINE MOUNT 3	2					
23	5GH–15317–00	SPACER, ENGINE MOUNT	1					
24	3C2–E5471–00	DUCT, AIR	1					
25	5BF–1443E–00	PIPE, DRAIN	1					
26	90467–160A4	CLIP	1					
27	5ND–E5472–00	SEAL, AIR DUCT	1					

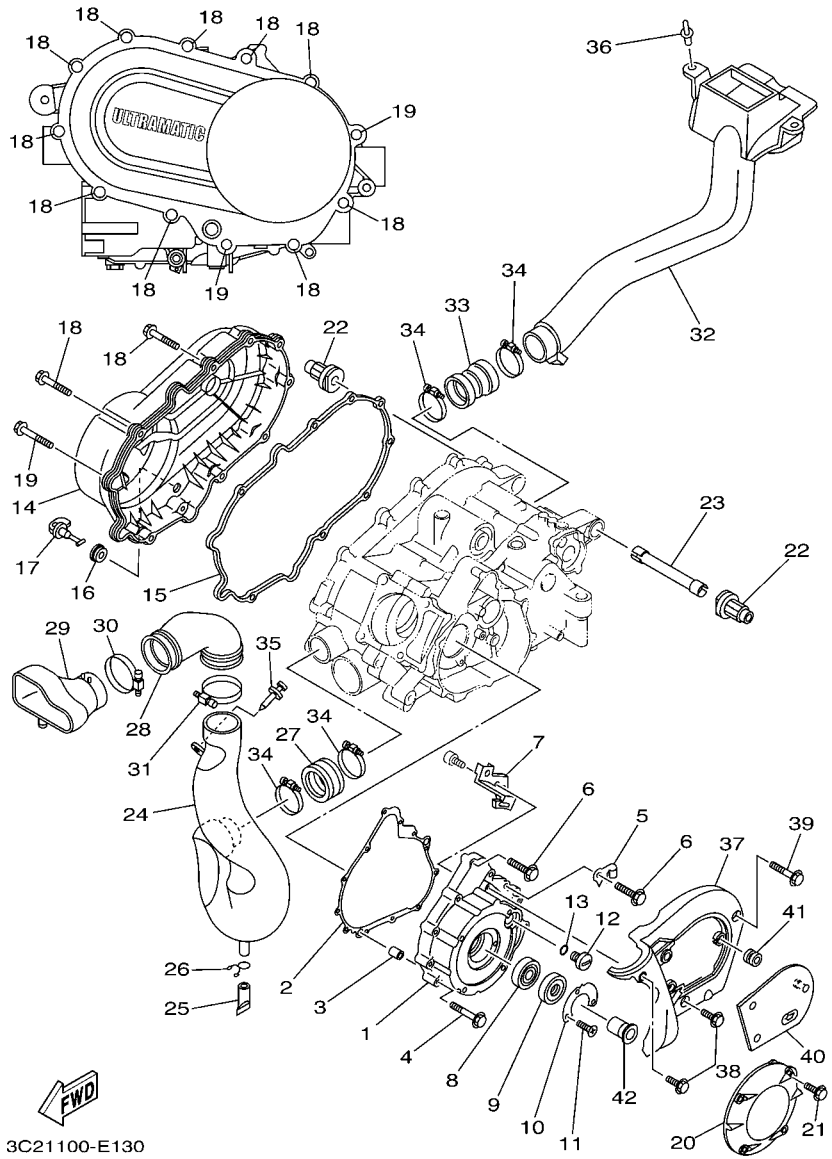

FIG. 13 CRANKCASE COVER 1

REF. NO.	PART NO.	DESCRIPTION	USA					REMARKS
28	3C2–E5472–00	SEAL, AIR DUCT	1					
29	3C2–E2692–00	DUCT, 2	1					
30	3C2–F1823–00	CLAMP, HOSE	1					
31	3C2–F1823–00	CLAMP, HOSE	1					
32	5ND–E5473–00	DUCT, AIR	1					
33	5ND–E5474–00	SEAL, AIR DUCT	1					
34	90450–64002	HOSE CLAMP ASSY	4					
35	90269–06800	RIVET	1					
36	90269–08813	RIVET	2					
37	5ND–E5423–00	COVER 2	1					
38	95022–06014	BOLT, FLANGE	2					
39	95022–06035	BOLT, FLANGE	1					
40	5ND–E5413–00	COVER	1					
41	90480–13398	GROMMET	3					
42	3GD–15777–10	BOSS, STARTER PULLEY	1					

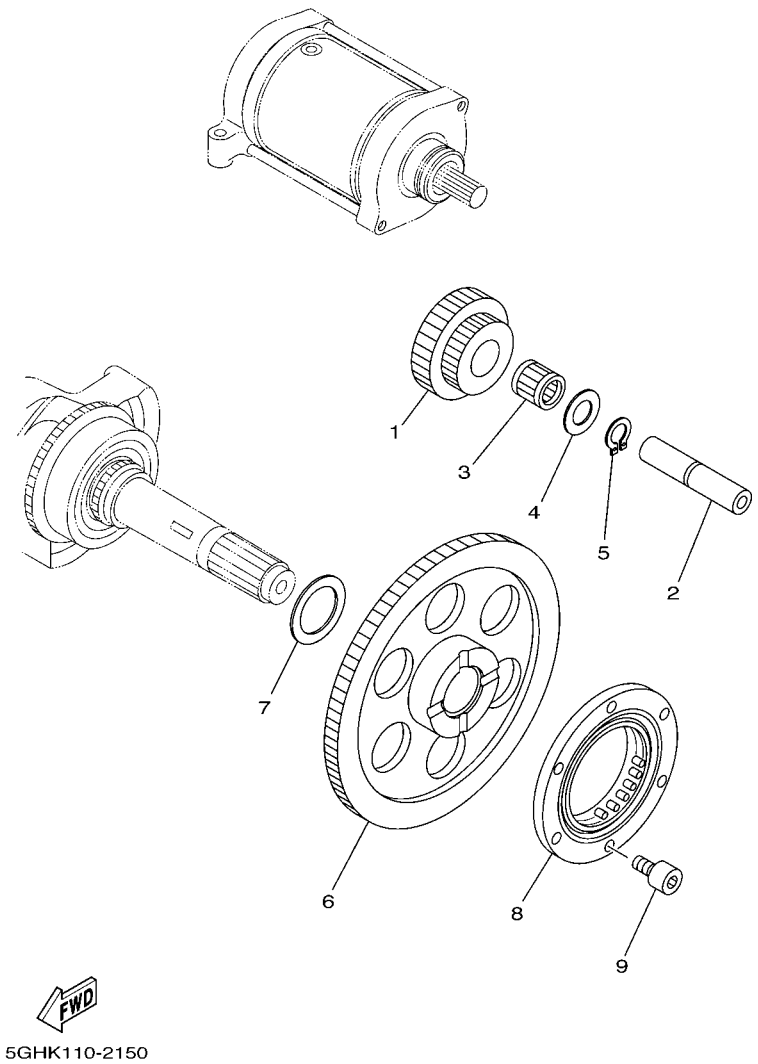

FIG. 14 STARTER CLUTCH

REF. NO.	PART NO.	DESCRIPTION	USA					REMARKS
1	5GH–15512–00	GEAR, IDLER 1	1					
2	4KB–15522–01	SHAFT 2	1					
3	93310–212R6	BEARING	1					
4	90201–123K4	WASHER, PLATE	1					
5	99009–12400	CIRCLIP	1					
6	5GH–15517–10	GEAR, IDLER 2	1					
7	90201–25291	WASHER, PLATE	1					
8	1UY–15590–01	STARTER ONE-WAY ASSY	1					
9	91312–08016	BOLT	6					

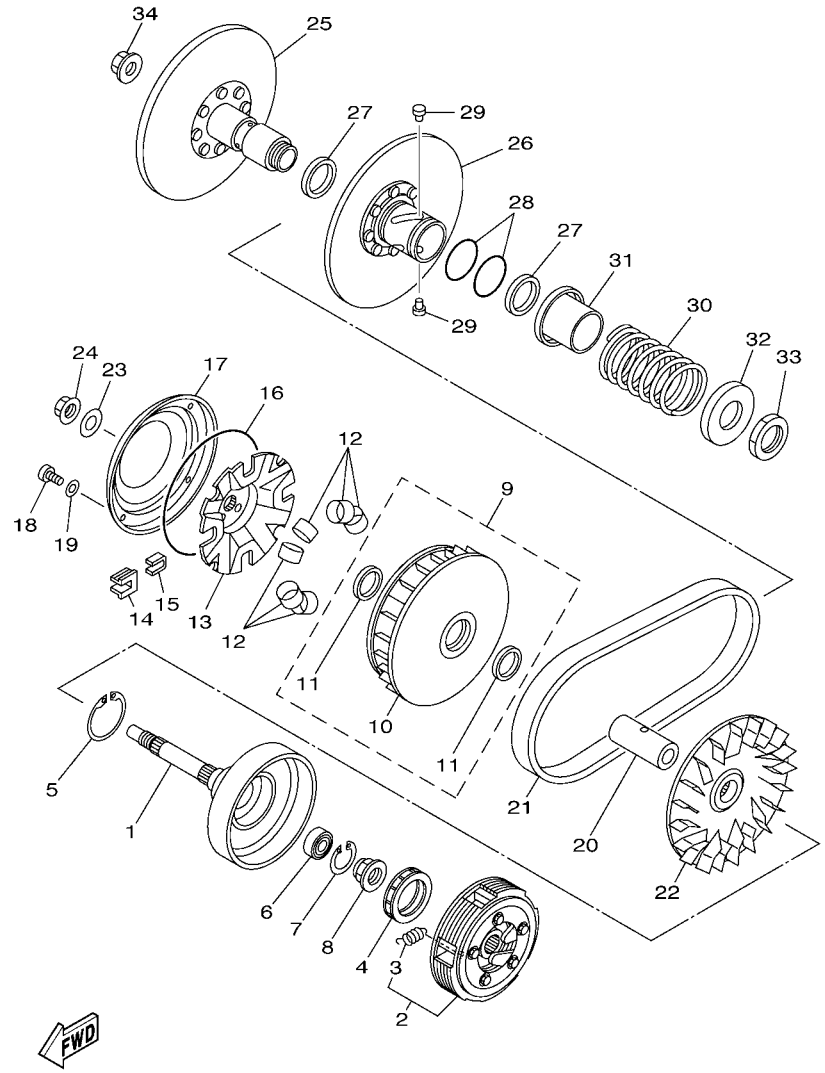

3C24100-F160

FIG. 15 CLUTCH

REF. NO.	PART NO.	DESCRIPTION	USA					REMARKS
1	5GH–16611–10	CLUTCH HOUSING COMP.	1					
2	5GH–16620–00	CLUTCH CARRIER ASSY	1					
3	5GH–16626–00	.SPRING, CLUTCH WEIGHT 1	5					
4	5GH–16664–00	BEARING, ONE WAY	1					
5	93410–46079	CIRCLIP	1					
6	93315–21813	BEARING	1					
7	93450–24062	CIRCLIP	1					
8	90179–22005	NUT	1					
9	5GH–17606–00	PRIMARY SLIDING SHEAVE COMP.	1					
10	5GH–17620–00	.PRIMARY SLIDING SHEAVE COMP.	1					
11	93101–31167	.OIL SEAL	2					
12	5GH–17632–00	WEIGHT	8					
13	5GH–17623–00	CAM	1					
14	4WV–17653–00	SLIDER	4					
15	4WV–17654–01	SPACER 1	4					
16	93211–52001	O-RING	1					
17	5GH–17639–00	STOPPER	1					
18	90157–04006	SCREW, PAN HEAD	4					
19	90201–047R9	WASHER, PLATE	4					
20	90387–1914K	COLLAR	1					
21	3C2–17641–00	V-BELT	1					
22	5UH–17611–00	SHEAVE, PRIMARY FIXED	1					
23	90201–190T7	WASHER, PLATE	1					
24	90179–16005	NUT	1					
25	5GH–17660–10	SECONDARY FIXED SHEAVE COMP.	1					
26	5GH–17670–00	SECONDARY SLIDING SHEAVE	1					
27	93104–41119	OIL SEAL	2					

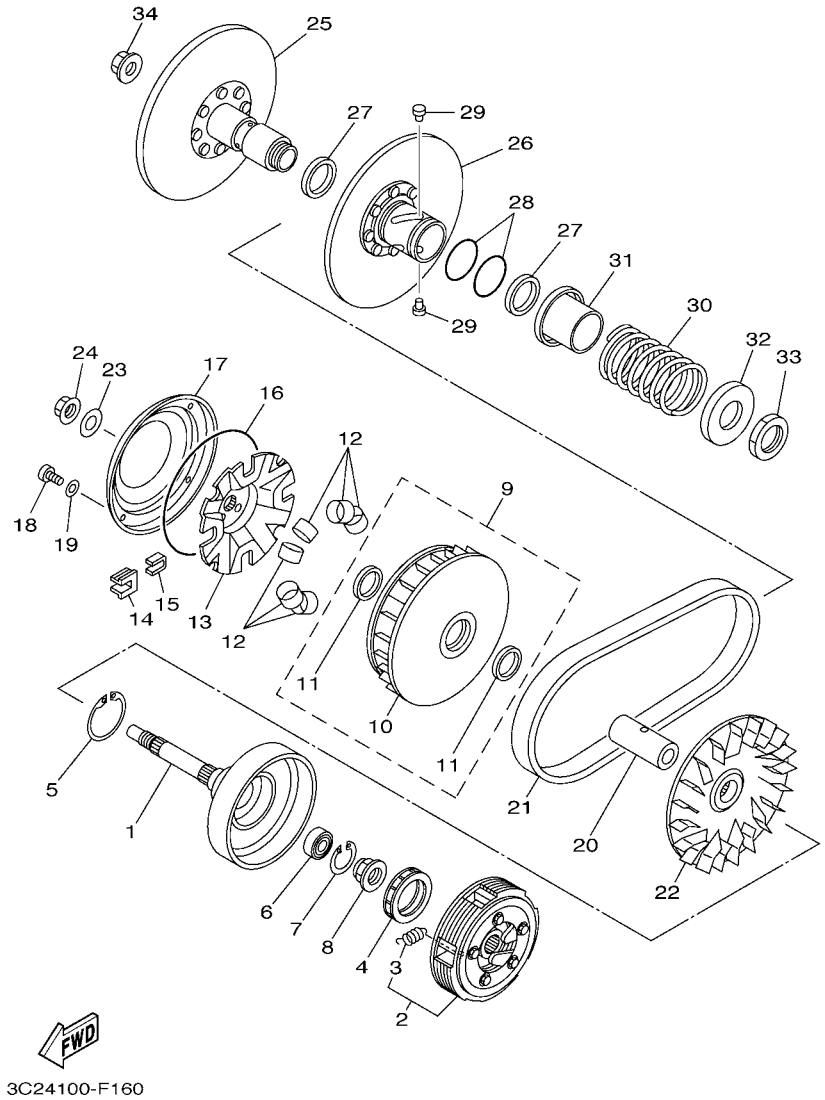

FIG. 15 CLUTCH

REF. NO.	PART NO.	DESCRIPTION	USA					REMARKS
28	93210–44545	O-RING	2					
29	4CW–17664–00	PIN, GUIDE	4					
30	90501–626L9	SPRING, COMPRESSION	1					
31	4WV–17684–00	SEAT, SECONDARY SPRING	1					
32	4WV–17644–00	SEAT,SPRING	1					
33	90170–36279	NUT	1					
34	90179–16005	NUT	1					

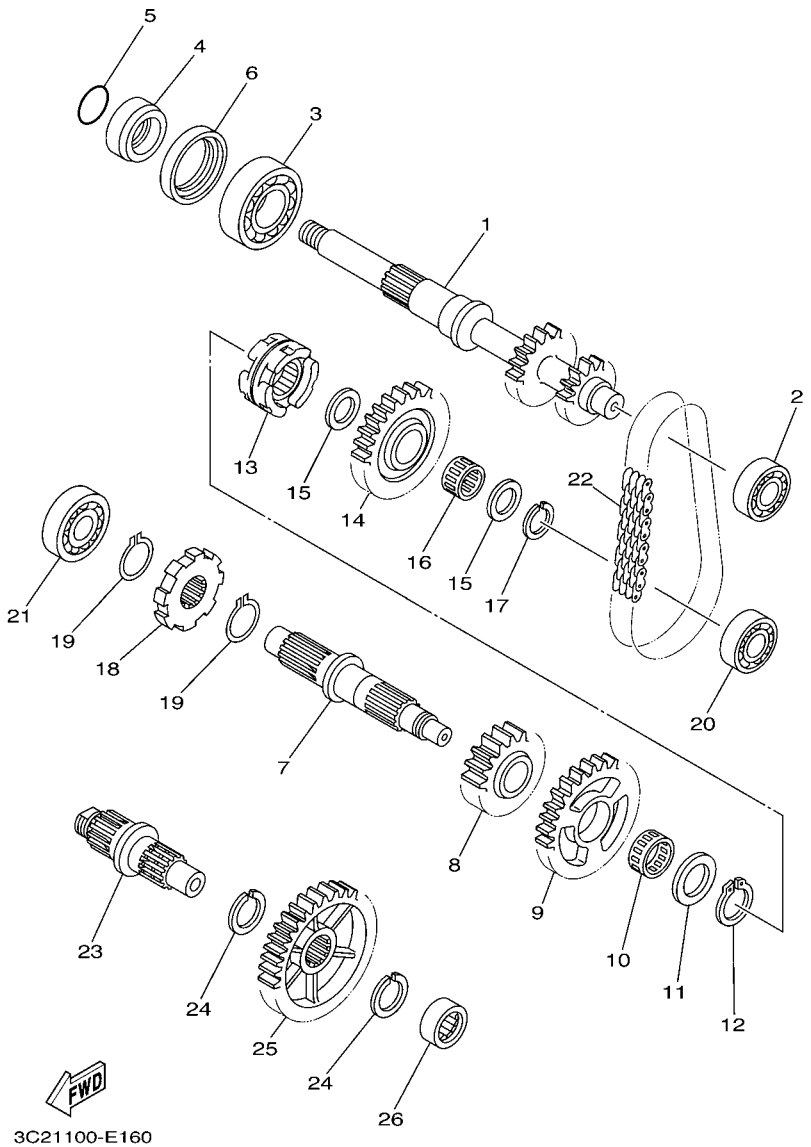

FIG. 16 TRANSMISSION

REF. NO.	PART NO.	DESCRIPTION	USA					REMARKS
1	5TE–17681–00	SHAFT, SECONDARY	1					
2	93306–00415	BEARING	1					
3	93306–20601	BEARING	1					
4	90387–26001	COLLAR	1					
5	93210–26001	O-RING	1					
6	93102–42004	OIL SEAL	1					
7	1P1–17402–00	DRIVE AXLE ASSY	1					
8	5GH–17582–00	GEAR, MIDDLE DRIVE(24T)	1					
9	5GH–17223–00	GEAR, HIGH WHEEL(38T)	1					
10	93310–32590	BEARING	1					
11	90201–250R9	WASHER, PLATE	1					
12	93440–25084	CIRCLIP	1					
13	1P1–17285–00	CLUTCH, DOG	1					
14	5GH–17453–10	SPROCKET, DRIVEN(29T)	1					
15	90201–20278	WASHER, PLATE	2					
16	93310–420F2	BEARING	1					
17	93410–20038	CIRCLIP	1					
18	5GH–17473–00	STOPPER	1					
19	93440–25084	CIRCLIP	2					
20	93306–30201	BEARING	1					
21	93306–20464	BEARING	1					
22	94591–54038	CHAIN(23RH302-38 ASM)	1					
23	5ND–17523–00	SHAFT	1					
24	93440–25084	CIRCLIP	2					
25	5GH–17583–00	GEAR, MIDDLE DRIVEN(39T)	1					
26	93311–42077	BEARING	1					

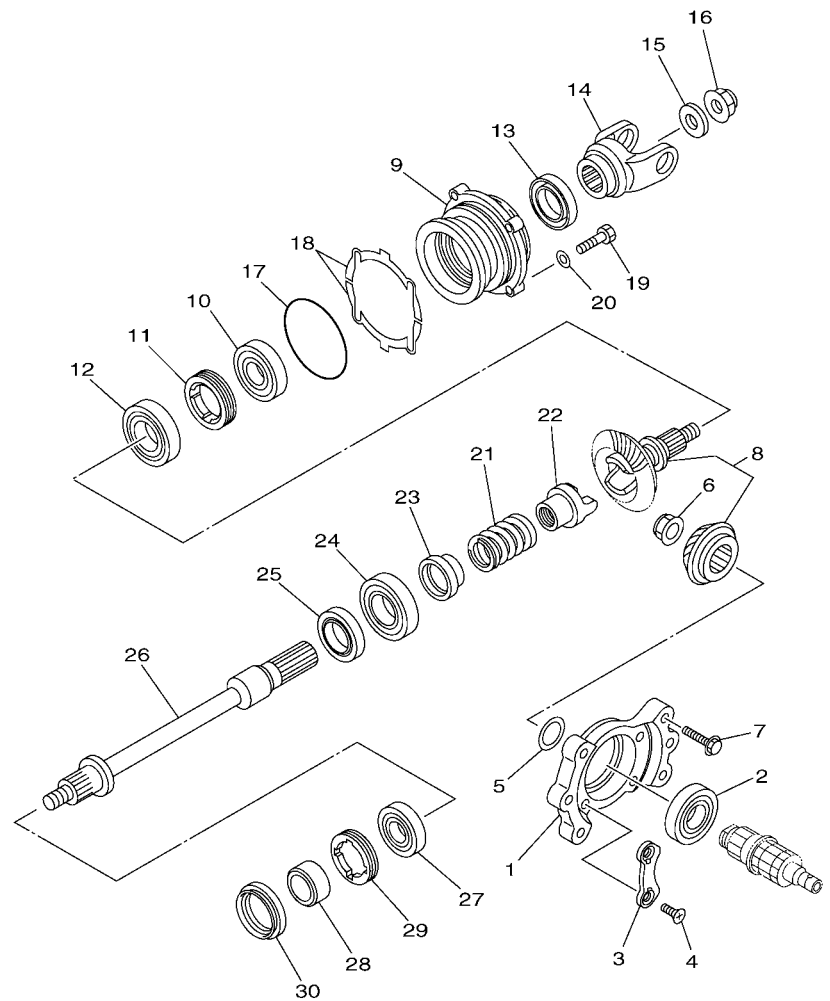

3C2H100-H170

FIG. 17 MIDDLE DRIVE GEAR

REF. NO.	PART NO.	DESCRIPTION	USA					REMARKS
1	5GH–17521–00	HOUSING, BEARING	1					
2	93306–20622	BEARING	1					
3	11H–15383–02	PLATE, BEARING COVER	2					
4	90149–08013	SCREW	4					
5	52G–17531–01	SHIM, PINION (0.1T)	1					UR
	52G–17531–11	SHIM, PINION (0.15T)	1					UR
	52G–17531–21	SHIM, PINION (0.2T)	1					UR
	52G–17531–31	SHIM, PINION (0.3T)	1					UR
	52G–17531–41	SHIM, PINION (0.4T)	1					UR
	52G–17531–51	SHIM, PINION (0.5T)	1					UR
6	90179–22015	NUT	1					
7	90105–08150	BOLT, FLANGE	6					
8	4WV–17530–10	PINION SET	1					
9	5GH–17551–00	HOUSING, BEARING	1					
10	93306–30538	BEARING	1					
11	90179–65305	NUT	1					
12	93306–20715	BEARING	1					
13	93101–35097	OIL SEAL	1					
14	5UH–17556–10	YOKE, JOINT	1					
15	90201–166R6	WASHER, PLATE	1					
16	90179–16006	NUT	1					
17	93210–78544	O-RING	1					
18	5GH–17531–00	SHIM, PINION (0.1T)	2					UR
	5GH–17531–10	SHIM, PINION (0.15T)	2					UR
	5GH–17531–20	SHIM, PINION (0.2T)	2					UR
	5GH–17531–30	SHIM, PINION (0.3T)	2					UR
	5GH–17531–40	SHIM, PINION (0.4T)	2					UR

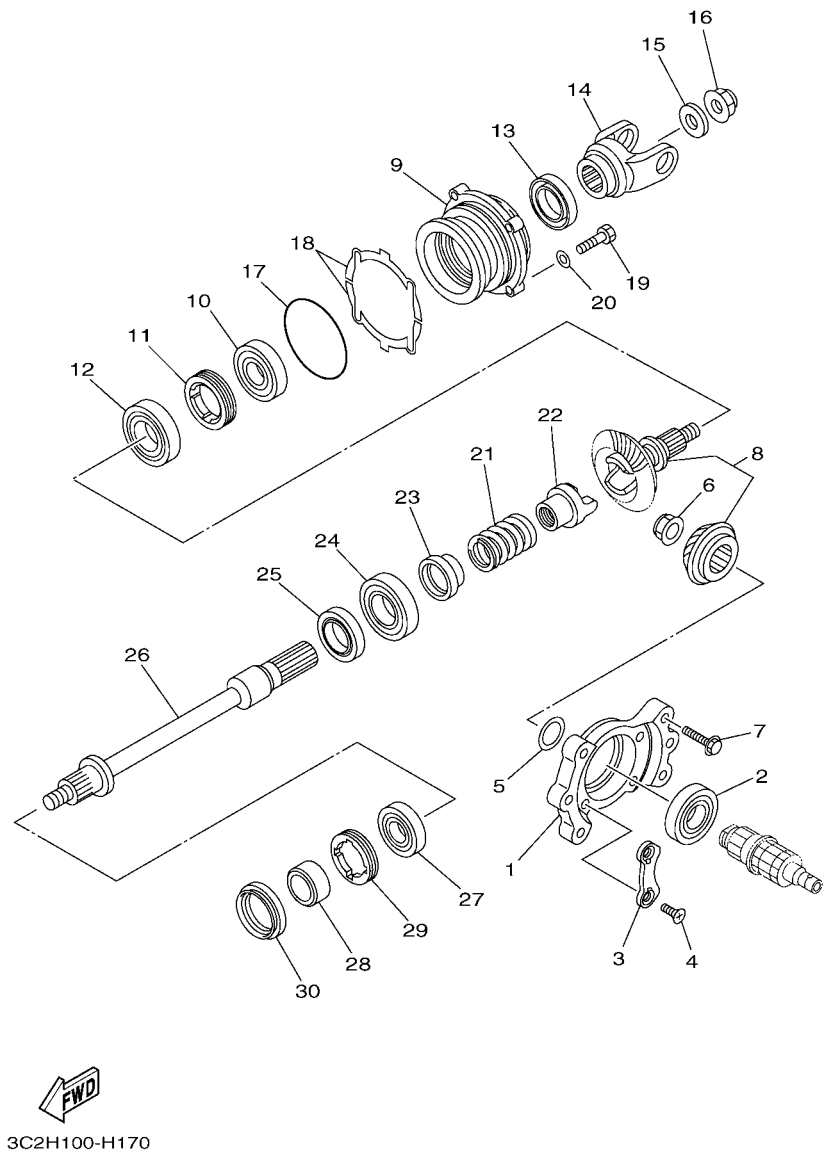

FIG. 17 MIDDLE DRIVE GEAR

REF. NO.	PART NO.	DESCRIPTION	USA					REMARKS
18	5GH–17531–50	SHIM, PINION (0.5T)	2					UR
	5GH–17531–60	SHIM, PINION (0.6T)	2					UR
19	97022–08030	BOLT	4					
20	92902–08600	WASHER, PLATE	4					
21	90501–650L5	SPRING, COMPRESSION	1					
22	4VR–17527–00	CAM, DRIVEN	1					
23	5UH–17585–00	COLLAR, GEAR	1					
24	93306–00612	BEARING	1					
25	93102–30170	OIL SEAL	1					
26	5UH–1761A–00	SHAFT, 1	1					
27	93306–20582	BEARING	1					
28	90387–252R2	COLLAR	1					
29	90179–55660	NUT	1					
30	93102–35380	OIL SEAL	1					

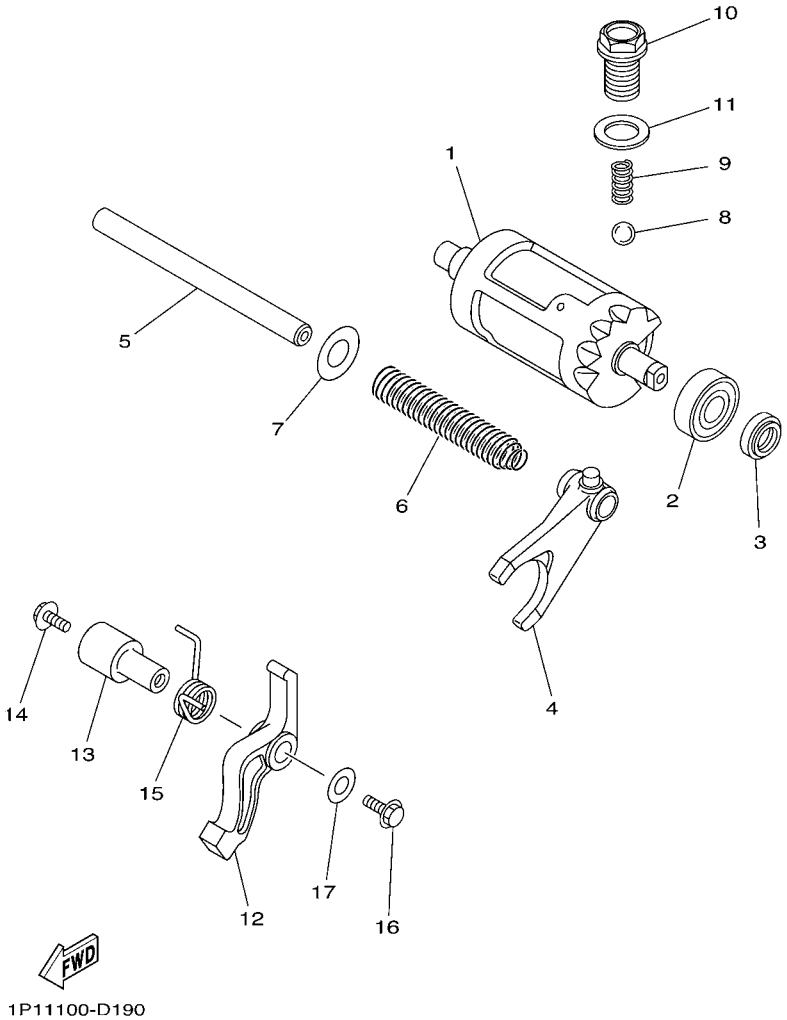

FIG. 18 SHIFT CAM & FORK

REF. NO.	PART NO.	DESCRIPTION	USA					REMARKS
1	1P1–18540–00	SHIFT CAM ASSY	1					
2	93306–00208	BEARING	1					
3	93102–15212	OIL SEAL	1					
4	1D9–18511–00	FORK, SHIFT 1	1					
5	4KB–18531–01	BAR, SHIFT FORK GUIDE 1	1					
6	90501–160A1	SPRING, COMPRESSION	1					
7	90201–15564	WASHER, PLATE (1.5T)	1					
8	93503–08007	BALL	1					
9	90501–10353	SPRING, COMPRESSION	1					
10	90105–14003	BOLT, FLANGE	1					
11	90430–14194	GASKET	1					
12	5GH–18148–00	LEVER, STOPPER	1					
13	5GH–1812E–00	SHAFT, STOPPER	1					
14	95022–06016	BOLT, FLANGE	1					
15	90508–235B7	SPRING, TORSION	1					
16	95022–06014	BOLT, FLANGE	1					
17	90201–06060	WASHER, PLATE	1					

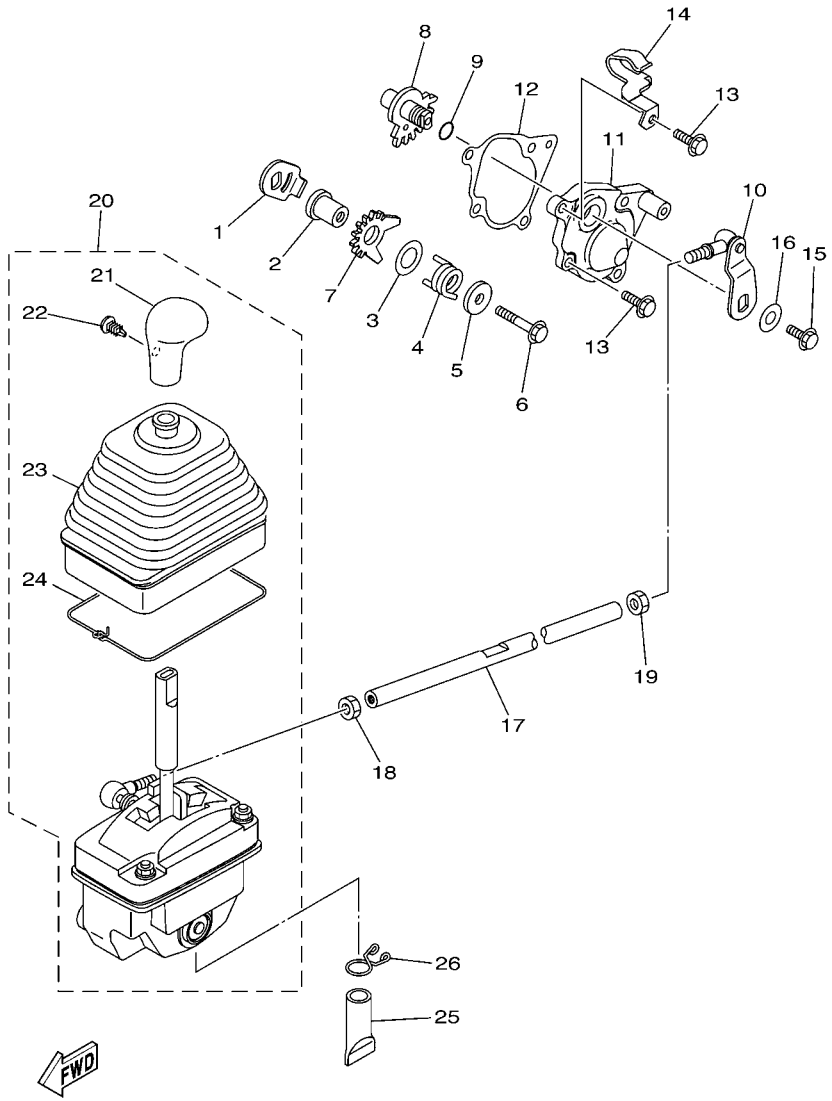

FIG. 19 SHIFT SHAFT

REF. NO.	PART NO.	DESCRIPTION	USA					REMARKS
1	4SH–18198–00	LEVER	1					
2	90387–0613B	COLLAR	1					
3	90201–132G5	WASHER, PLATE	1					
4	90508–35764	SPRING, TORSION	1					
5	90201–06036	WASHER, PLATE	1					
6	95812–06035	BOLT, FLANGE	1					
7	5KM–18191–00	LEVER	1					
8	5GH–18197–00	SHAFT	1					
9	93210–11073	O-RING	1					
10	5GH–18104–00	SHIFT GUIDE COMP.	1					
11	5GH–18129–01	COVER, SHIFT SHAFT	1					
12	5GH–18146–00	GASKET	1					
13	97080–06020	BOLT	4					
14	90465–08336	CLAMP	1					
15	90105–06176	BOLT, FLANGE	1					
16	90201–06036	WASHER, PLATE	1					
17	3C2–18115–00	ROD, SHIFT	1					
18	90170–08358	NUT	1					
19	95302–08700	NUT	1					
20	1P1–18300–01	SHIFTER ASSY	1					
21	1P1–18174–00	.KNOB, SHIFT LEVER	1					
22	90269–05055	.RIVET	1					
23	5GH–18131–00	.BOOT, SEALING	1					
24	5GH–18617–00	.STOPPER,RUBBER	1					
25	5BF–1443E–00	PIPE, DRAIN	1					
26	90467–150A2	CLIP	1					

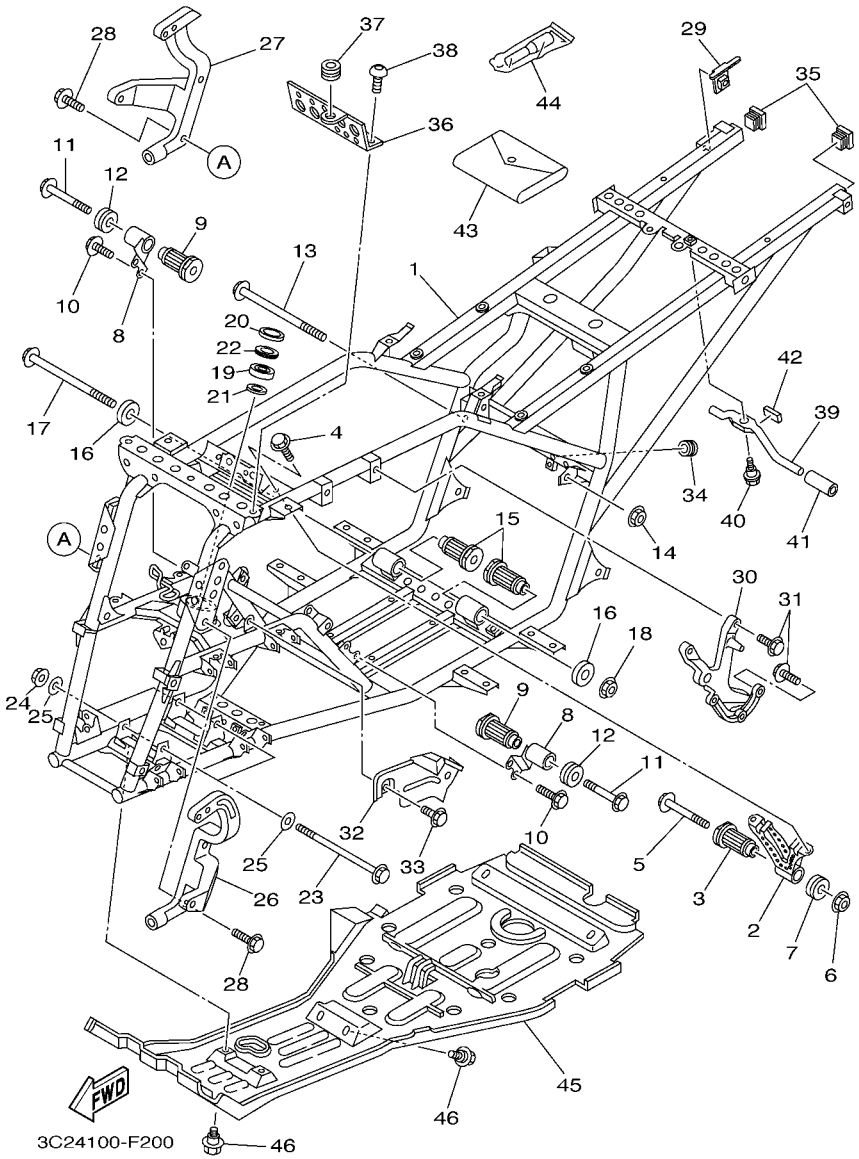

FIG. 20 FRAME

REF. NO.	PART NO.	DESCRIPTION	USA					REMARKS
1	3C2–F1110–00	FRAME COMP.	1					
2	5ND–F1315–01	STAY, ENGINE 2	1					
3	5ND–E5336–00	DAMPER, ENGINE MOUNT 3	1					
4	95812–08012	BOLT, FLANGE	2					
5	95812–10110	BOLT, FLANGE	1					
6	95602–10200	NUT, U FLANGE	1					
7	5ND–F1486–00	DAMPER 2	1					
8	5ND–F1316–01	STAY, ENGINE 3	2					
9	5ND–E5336–00	DAMPER, ENGINE MOUNT 3	2					
10	95812–08012	BOLT, FLANGE	4					
11	95812–10080	BOLT, FLANGE	2					
12	5ND–F1486–00	DAMPER 2	2					
13	90105–10284	BOLT, FLANGE	1					
14	95602–10200	NUT, U FLANGE	1					
15	5ND–E5336–00	DAMPER, ENGINE MOUNT 3	2					
16	5ND–F1488–00	DAMPER	2					
17	90105–10284	BOLT, FLANGE	1					
18	95602–10200	NUT, U FLANGE	1					
19	93306–203YN	BEARING	1					
20	93102–25081	OIL SEAL	1					
21	93102–25099	OIL SEAL	1					
22	2GU–23872–00	HOLDER, BEARING	1					
23	90105–10051	BOLT, FLANGE	2					
24	95602–10200	NUT, U FLANGE	2					
25	90201–10035	WASHER, PLATE	4					
26	3C2–F831V–00	STAY, HEAD LIGHT 1	1					
27	3C2–F832V–00	STAY, HEAD LIGHT 2	1					

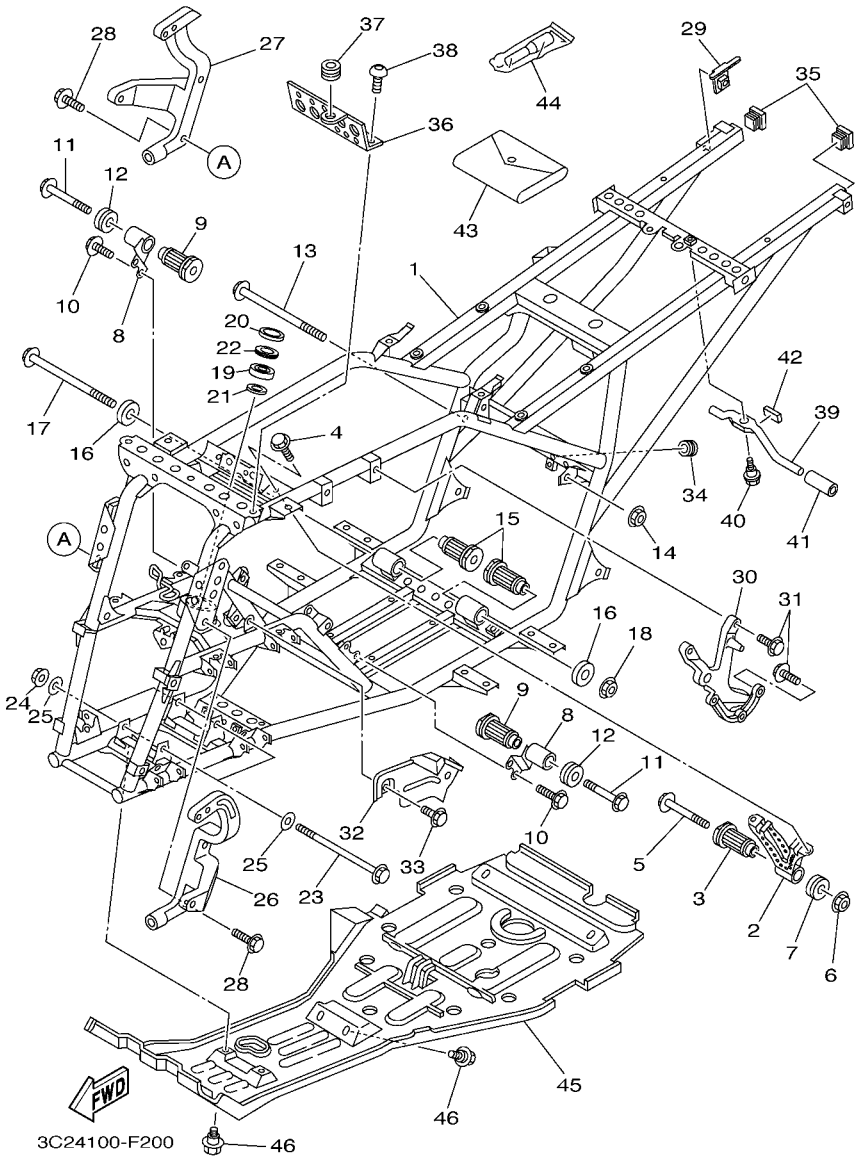

FIG. 20 FRAME

REF. NO.	PART NO.	DESCRIPTION	USA					REMARKS
28	95812–08025	BOLT, FLANGE	4					
29	3C2–F1446–01	STAY, MUFFLER 2	1					
30	5ND–F1585–01	ARM	1					
31	95822–08020	BOLT, FLANGE	5					
32	5ND–F2825–00	PROTECTOR 1	1					
33	95812–06010	BOLT, FLANGE	2					
34	90480–10517	GROMMET	1					
35	5FU–F111A–00	CAP, MAIN PIPE	2					
36	3C2–F1228–00	BRACKET, RESERVE TANK	1					
37	90480–13004	GROMMET	1					
38	90149–06280	SCREW	2					
39	3C2–K7173–00	LEVER, LATCH 1	1					
40	90109–06172	BOLT	1					
41	JJ3–K818M–00	CAP, PROTECTOR END 4	1					
42	3C2–F4144–00	HOLDER, DAMPER	1					
43	5ND–F8100–00	TOOL KIT	1					
44	1NV–2811A–01	GAUGE, AIR	1					
45	5ND–F147A–02	GUARD, ENGINE 1	1					
46	90109–06172	BOLT	8					

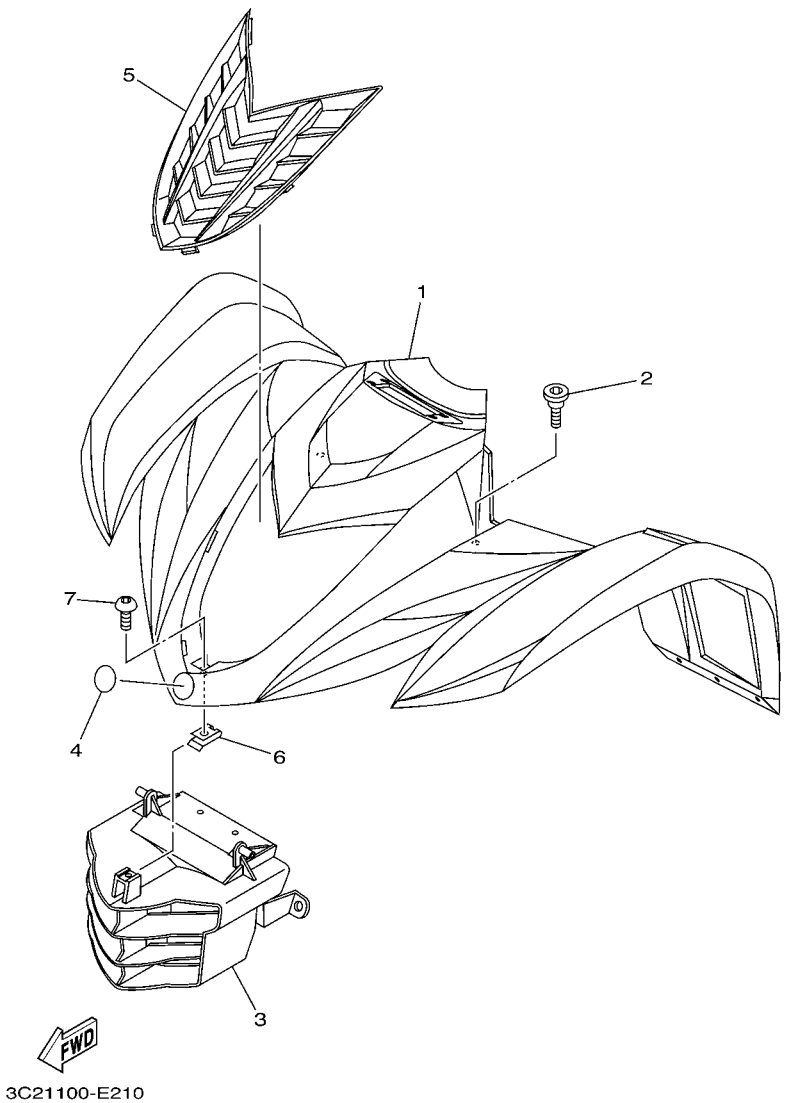

FIG. 21 FRONT FENDER

REF. NO.	PART NO.	DESCRIPTION	USA					REMARKS
1	3C2–F1500–90	FRONT FENDER ASSY	1					
2	90109–08076	BOLT	2					
3	3C2–F8309–00	GRILLE, FRONT	1					
4	3C2–F836B–00	TUNING FORK MARK	1					
5	3C2–F1556–A0	FENDER, FRONT 2	1					
6	90183–050A8	NUT, SPRING	1					
7	90110–05201	BOLT, HEXAGON SOCKET HEAD	1					

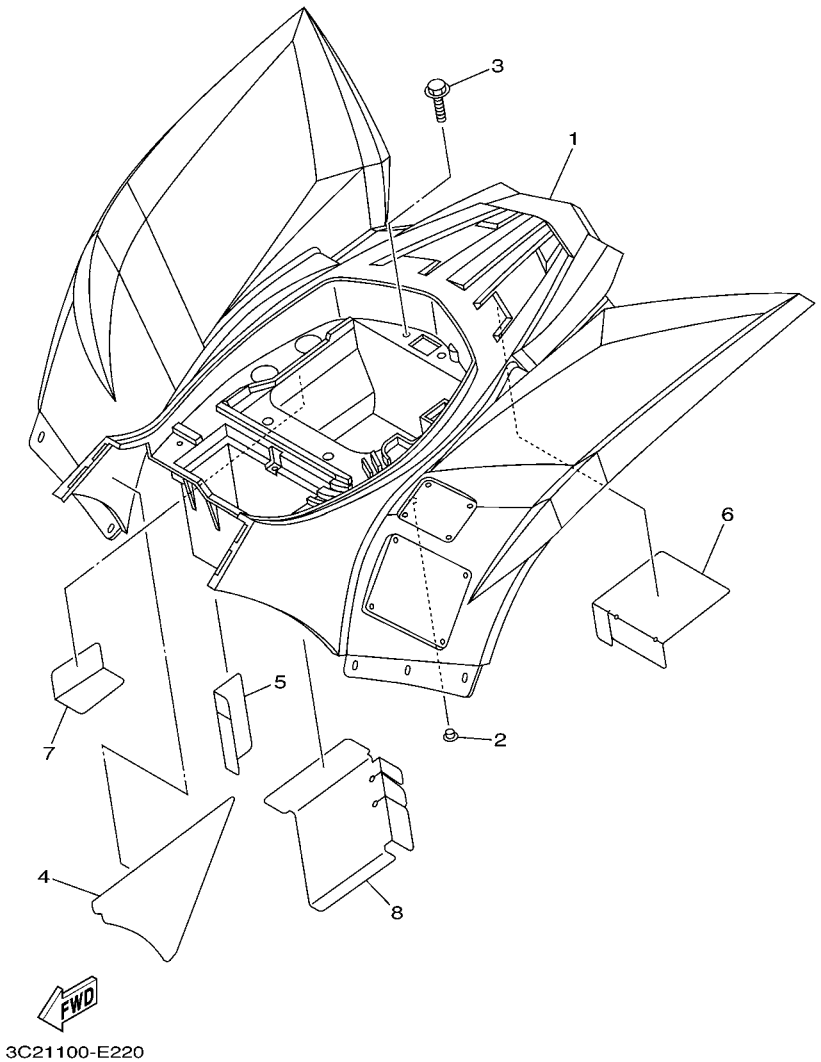

FIG. 22 REAR FENDER

REF. NO.	PART NO.	DESCRIPTION	USA					REMARKS
1	3C2–F1600–90	REAR FENDER ASSY.	1					
2	90338–09801	PLUG	2					
3	90119–06157	BOLT, WITH WASHER	1					
4	3C2–F163A–00	COVER, REAR FENDER 1	1					
5	5ND–F163E–00	COVER, REAR FENDER 2	1					
6	5ND–F1652–00	PROTECTOR	1					
7	5FU–F174A–02	INSULATOR, SIDE COVER	1					
8	5ND–F163F–00	COVER, REAR FENDER 3	1					

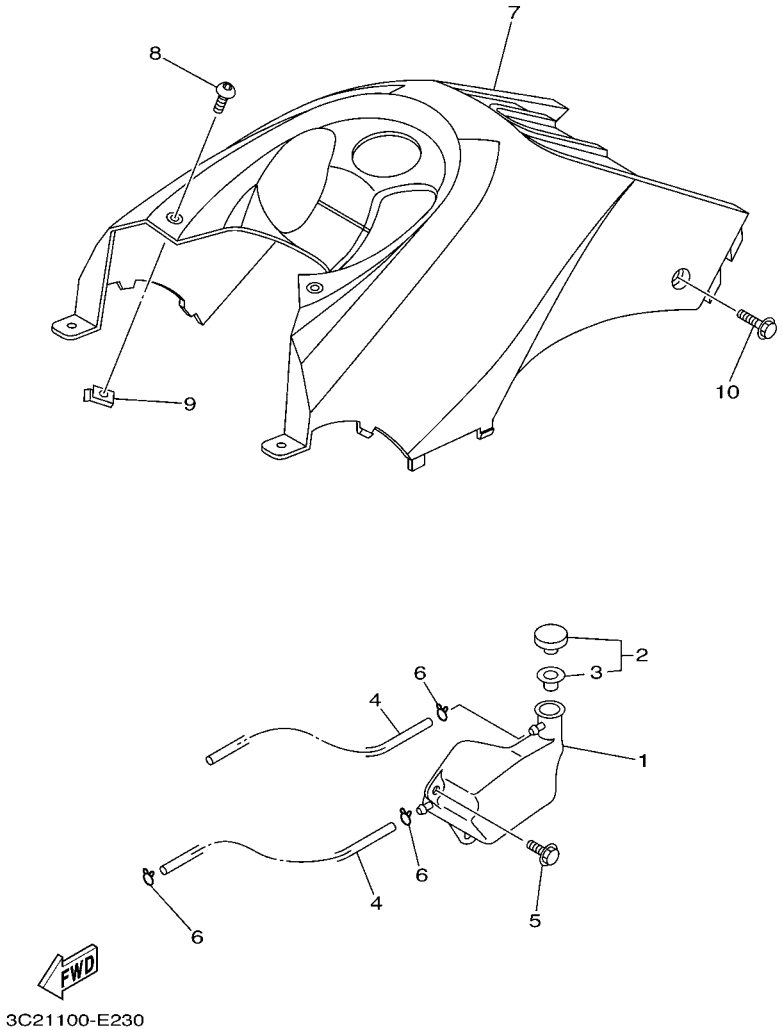

FIG. 23 SIDE COVER

REF. NO.	PART NO.	DESCRIPTION	USA					REMARKS
1	5ND–F1871–00	TANK, RECOVERY	1					
2	1AA–21815–00	CAP	1					
3	1AA–21874–00	.GASKET	1					
4	90445–081K8	HOSE (L780)	2					
5	90119–06157	BOLT, WITH WASHER	2					
6	90467–08003	CLIP	3					
7	3C2–F171A–30	COVER, TOP	1					
8	90110–05201	BOLT, HEXAGON SOCKET HEAD	2					
9	90183–050A8	NUT, SPRING	2					
10	90110–06007	BOLT, HEXAGON SOCKET HEAD	2					

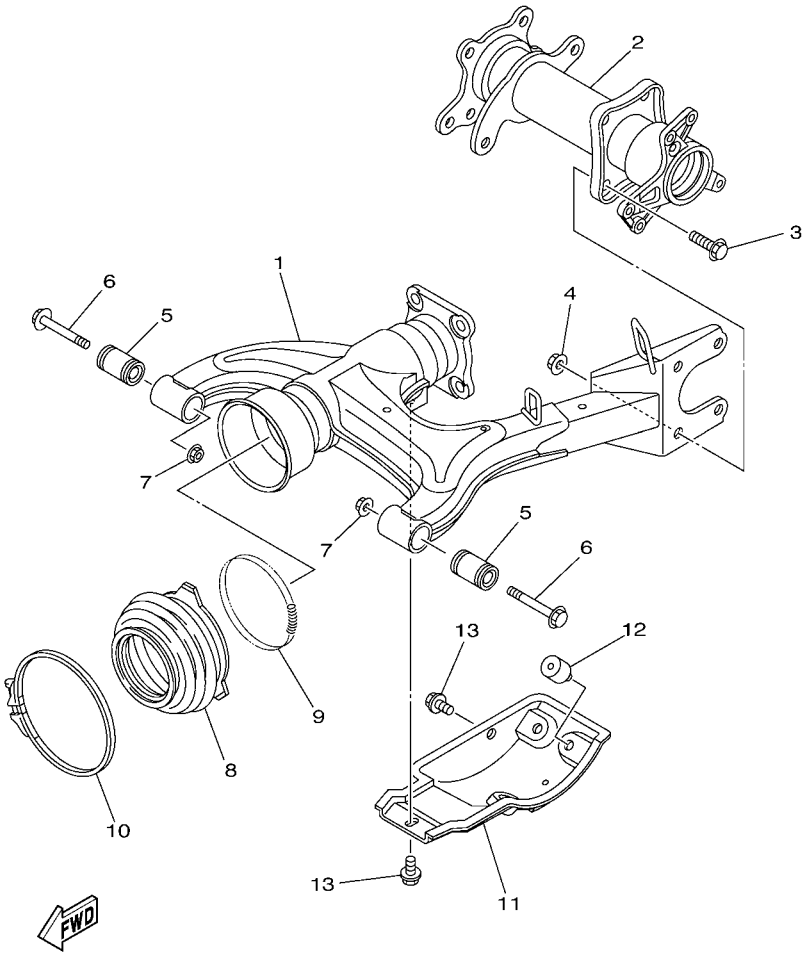

FIG. 24 REAR ARM

REF. NO.	PART NO.	DESCRIPTION	USA					REMARKS
1	3C2–F2110–00	REAR ARM COMP.	1					
2	5ND–G6540–13	REAR AXLE HOUSING COMP.	1					
3	95812–10020	BOLT, FLANGE	4					
4	95702–10500	NUT, WITH WASHER	4					
5	5ND–F2123–00	BUSH 1	2					
6	90105–12057	BOLT, FLANGE	2					
7	95602–12200	NUT, SELF-LOCKING	2					
8	5ND–F2189–00	BOOT, RUBBER	1					
9	90506–07135	SPRING, TENSION	1					
10	90460–85277	CLAMP, HOSE	1					
11	4XE–F219X–01	COVER	1					
12	109–27114–00	STOPPER, MAIN STAND	3					
13	95802–08012	BOLT, FLANGE	2					

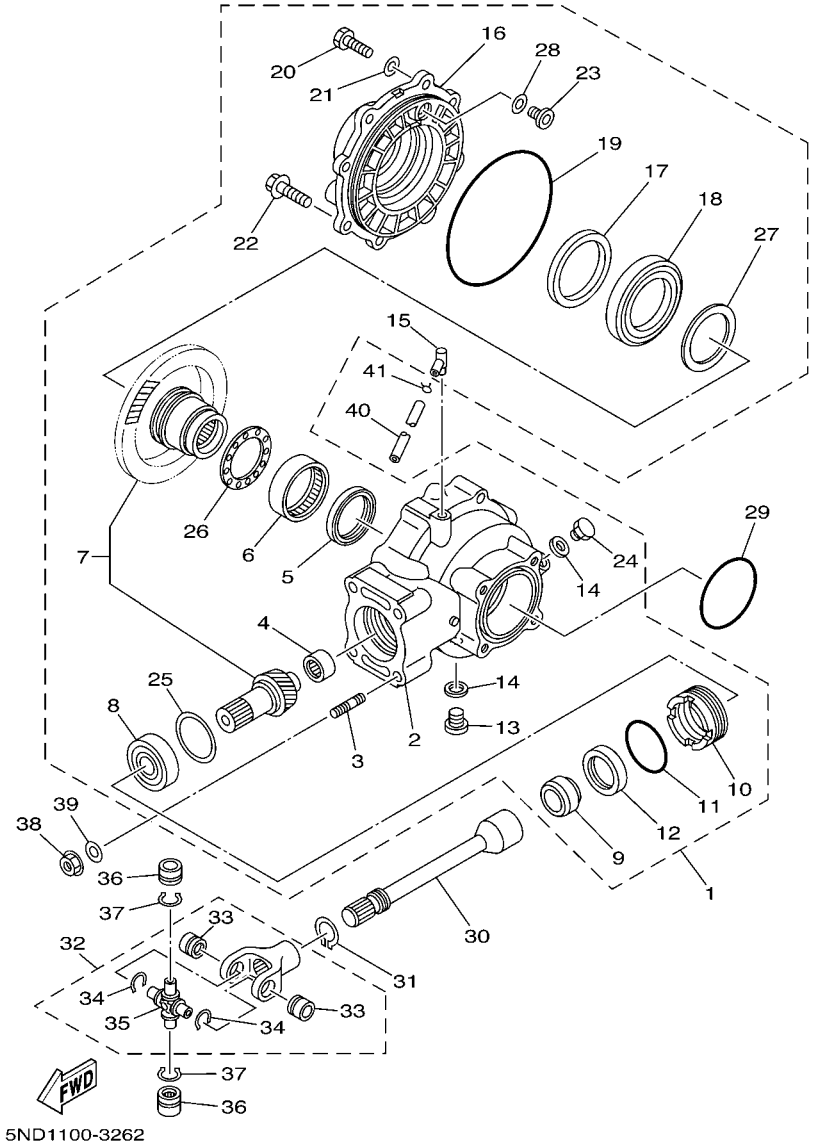

FIG. 25 DRIVE SHAFT

REF. NO.	PART NO.	DESCRIPTION	USA					REMARKS
1	5ND–G6101–03	REAR AXLE GEAR CASE ASSY	1					
2	5ND–G6151–01	.HOUSING, DRIVE SHAFT	1					
3	90116–10593	.BOLT, STUD	4					
4	4XE–G6102–00	.BEARING ASSY	1					
5	93101–52116	.OIL SEAL	1					
6	93317–855Y9	.BEARING	1					
7	5GT–Y4612–00	.RING GEAR SET	1					
8	93306–305Y6	.BEARING	1					
9	90387–255H9	.COLLAR	1					
10	29U–46125–00	.RETAINER, BEARING	1					
11	93210–59531	.O-RING	1					
12	93101–38098	.OIL SEAL	1					
13	90340–14046	.PLUG, STRAIGHT SCREW	1					
14	214–11198–01	.GASKET	2					
15	2N4–15371–00	.BREATHER	1					
16	5ND–G6152–00	.HOUSING, BEARING	1					
17	93102–65386	.OIL SEAL	1					
18	93316–013Y0	.BEARING	1					
19	93211–51749	.O-RING	1					
20	97022–08025	.BOLT	6					
21	92902–08600	.WASHER, PLATE	6					
22	95812–10025	.BOLT, FLANGE	2					
23	5FU–G6156–00	.STOPPER, RING GEAR	1					
24	90340–14029	.PLUG, STRAIGHT SCREW	1					
25	4XE–E7537–15	.SHIM, THRUST(T=0.15MM)	1					UR
	4XE–E7537–30	.SHIM, THRUST(T=0.30MM)	1					UR
	4XE–E7537–40	.SHIM, THRUST(T=0.40MM)	1					UR

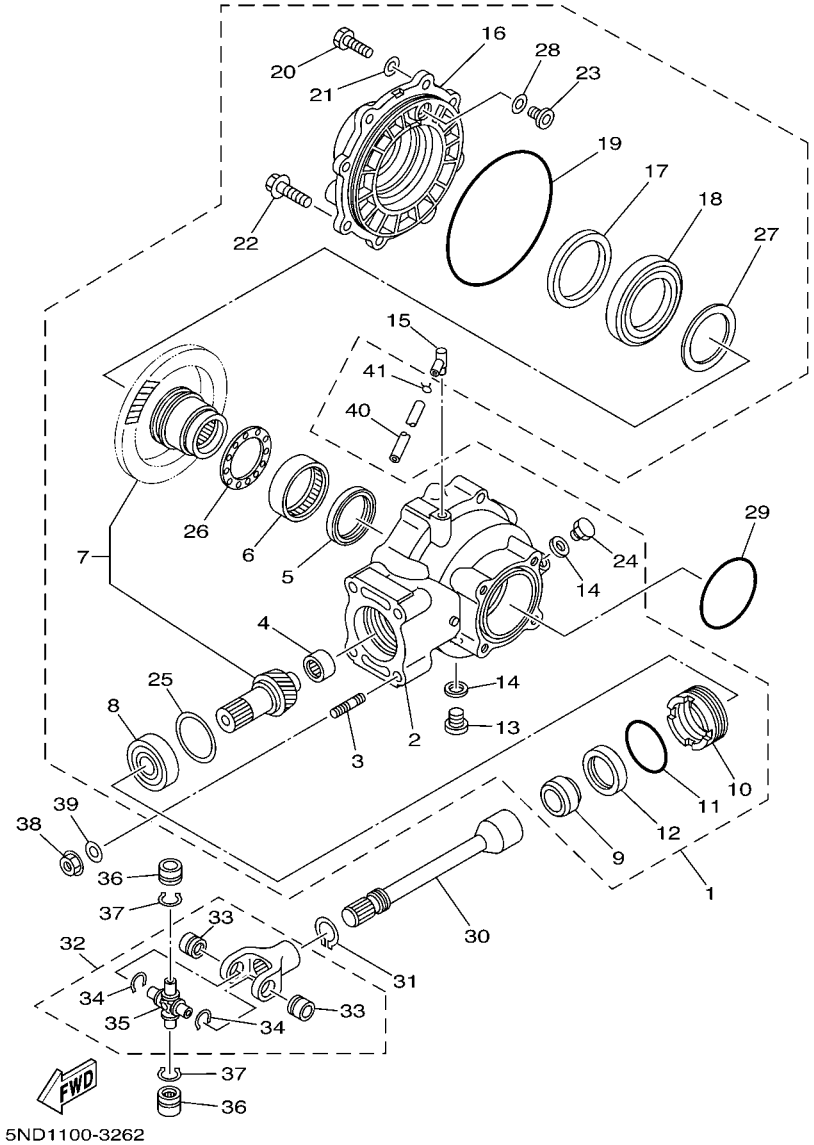

FIG. 25 DRIVE SHAFT

REF. NO.	PART NO.	DESCRIPTION	USA					REMARKS
25	4XE–E7537–45	.SHIM, THRUST(T=0.45MM)	1					UR
	4XE–E7537–50	.SHIM, THRUST(T=0.50MM)	1					UR
	4XE–E7537–60	.SHIM, THRUST(T=0.60MM)	1					UR
26	4XE–G6118–10	.SHIM, THRUST(T=1.0MM)	1					UR
	4XE–G6118–11	.SHIM, THRUST(T=1.1MM)	1					UR
	4XE–G6118–12	.SHIM, THRUST(T=1.2MM)	1					UR
	4XE–G6118–13	.SHIM, THRUST(T=1.3MM)	1					UR
	4XE–G6118–14	.SHIM, THRUST(T=1.4MM)	1					UR
	4XE–G6118–15	.SHIM, THRUST(T=1.5MM)	1					UR
	4XE–G6118–16	.SHIM, THRUST(T=1.6MM)	1					UR
	4XE–G6118–17	.SHIM, THRUST(T=1.7MM)	1					UR
	4XE–G6118–18	.SHIM, THRUST(T=1.8MM)	1					UR
	4XE–G6118–19	.SHIM, THRUST(T=1.9MM)	1					UR
	4XE–G6118–20	.SHIM, THRUST(T=2.0MM)	1					UR
	4XE–G6118–21	.SHIM, THRUST(T=2.1MM)	1					UR
27	4XE–G6117–25	.SHIM, RING GEAR(T=0.25MM)	1					UR
	4XE–G6117–30	.SHIM, RING GEAR(T=0.30MM)	1					UR
	4XE–G6117–35	.SHIM, RING GEAR(T=0.35MM)	1					UR
	4XE–G6117–40	.SHIM, RING GEAR(T=0.40MM)	1					UR
	4XE–G6117–45	.SHIM, RING GEAR(T=0.45MM)	1					UR
	4XE–G6117–50	.SHIM, RING GEAR(T=0.50MM)	1					UR
28	5FU–G6157–10	.SHIM, RING GEAR(T=0.10MM)	1					UR
	5FU–G6157–15	.SHIM, RING GEAR(T=0.15MM)	1					UR
	5FU–G6157–20	.SHIM, RING GEAR(T=0.20MM)	1					UR
	5FU–G6157–30	.SHIM, RING GEAR(T=0.30MM)	1					UR
	5FU–G6157–40	.SHIM, RING GEAR(T=0.40MM)	1					UR
	5FU–G6157–50	.SHIM, RING GEAR(T=0.50MM)	1					UR

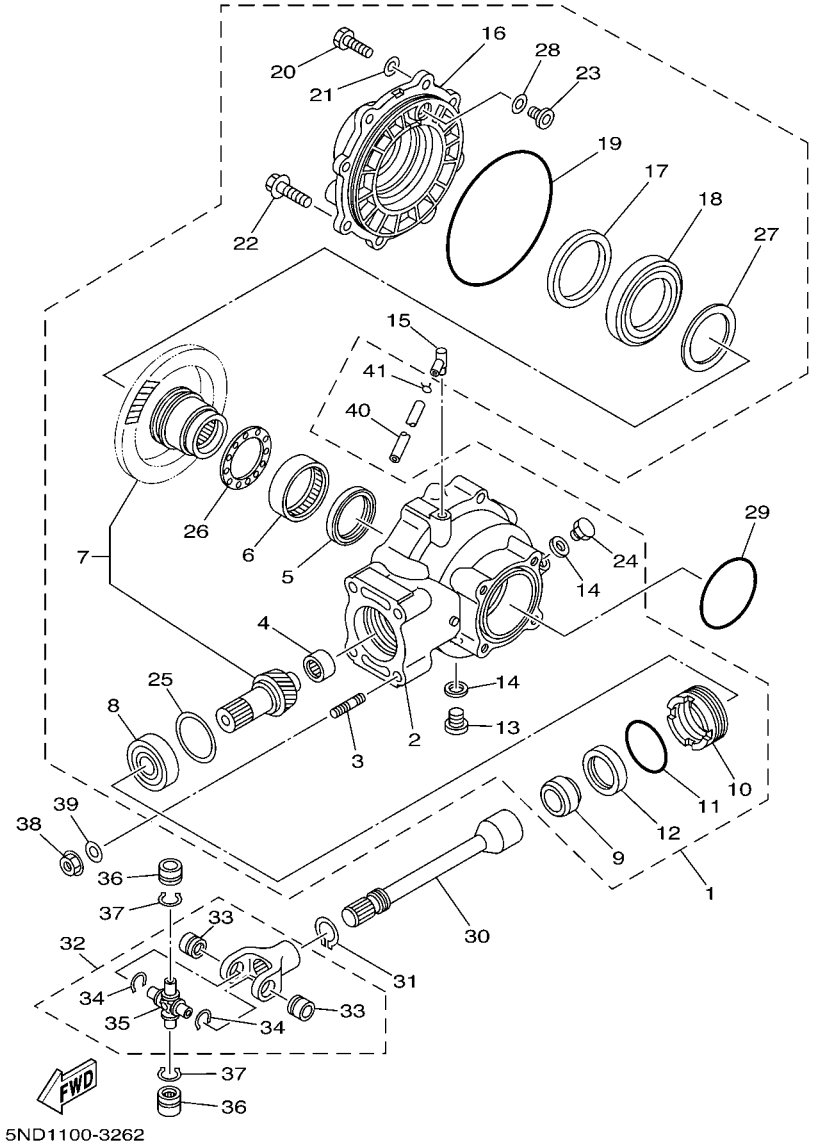

FIG. 25 DRIVE SHAFT

REF. NO.	PART NO.	DESCRIPTION	USA					REMARKS
29	93210–76800	O-RING	1					
30	5ND–G6172–10	SHAFT, DRIVE	1					
31	93410–22039	CIRCLIP	1					
32	3HN–46108–01	CROSS JOINT COMP. 3	1					
33	93399–99926	.BEARING	2					
34	93440–20088	.CIRCLIP	2					
35	2HR–46187–00	.SPIDER	1					
36	93399–99926	BEARING	2					
37	93440–20088	CIRCLIP	2					
38	95702–10500	NUT, WITH WASHER	4					
39	90201–10036	WASHER, PLATE	4					
40	90445–07810	HOSE (L1050)	1					
41	90467–07029	CLIP	1					

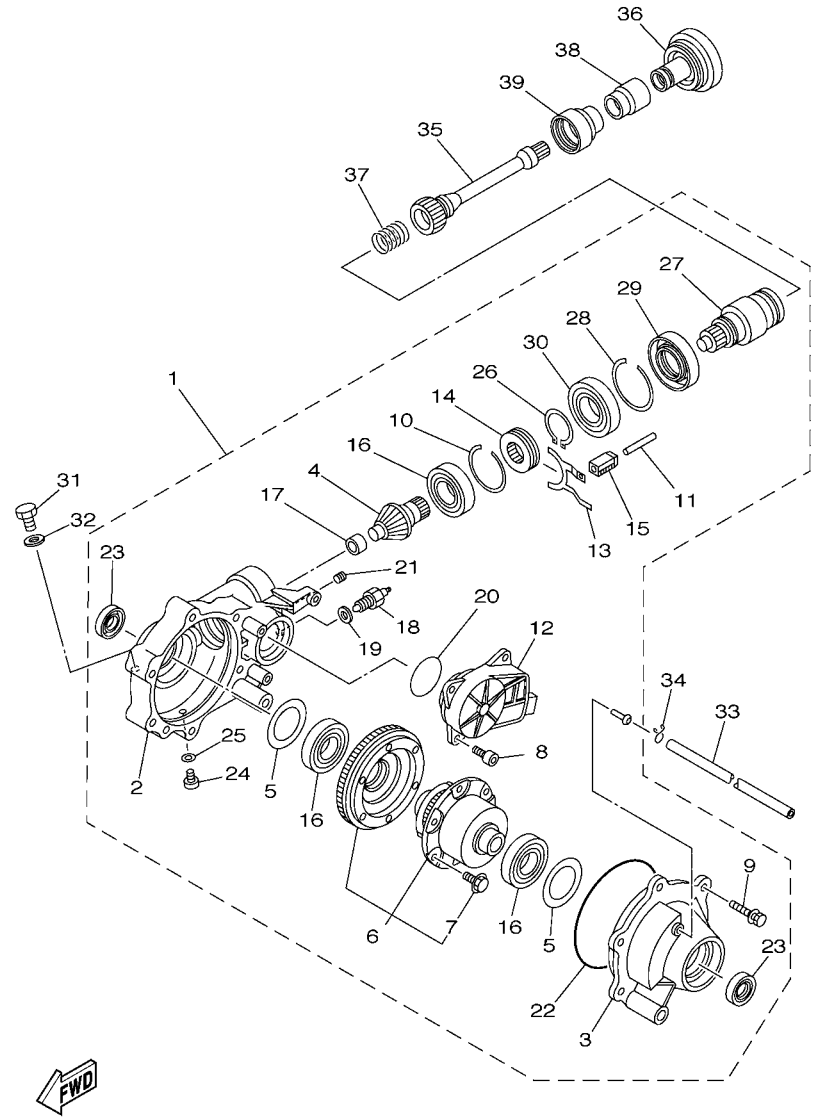

FIG. 26 FRONT DIFFERENTIAL

REF. NO.	PART NO.	DESCRIPTION	USA					REMARKS
1	5GH–46160–05	FRONT AXLE GEAR CASE COMP.	1					
2	5GH–46161–01	.HOUSING, SHAFT DRIVE 2	1					
3	5GH–46162–01	.HOUSING, BEARING 2	1					
4	5GH–46141–01	.PINION, DRIVE 2	1					
5	4WV–46119–01	.SHIM, THRUST (0.1T)	1					UR
	4WV–46119–11	.SHIM, THRUST (0.2T)	1					UR
	4WV–46119–21	.SHIM, THRUST (0.3T)	1					UR
	4WV–46119–31	.SHIM, THRUST (0.4T)	1					UR
	4WV–46119–41	.SHIM, THRUST (0.5T)	1					UR
	4WV–46119–51	.SHIM, THRUST (1.0T)	1					UR
6	5GH–46470–04	.LIMITED SLIP DIFF. ASSY	1					
7	4WV–46155–00	..BOLT 1	6					
8	91317–08020	.BOLT	3					
9	4WV–46159–00	.BOLT 3	6					
10	4WV–46143–00	.RING,HOLE SNAP 2	1					
11	5GH–18318–00	.SHAFT, SHIFTER	1					
12	5GH–4616A–02	.SERVO MOTOR COMP	1					
13	5GH–18514–01	.FORK, SHIFT 4	1					
14	4WV–46441–00	.CLUTCH,DRIVEN	1					
15	5GH–18319–00	.SHAFT 2	1					
16	4WV–46165–00	.BEARING 2	3					
17	4WV–46167–00	.BEARING 4	1					
18	3GD–82540–11	.NEUTRAL SWITCH ASSY	1					
19	4WV–46132–00	.GASKET 1	1					
20	93210–50768	.O-RING	1					
21	90113–08004	.BOLT, SET	1					
22	93211–40040	.O-RING	1					

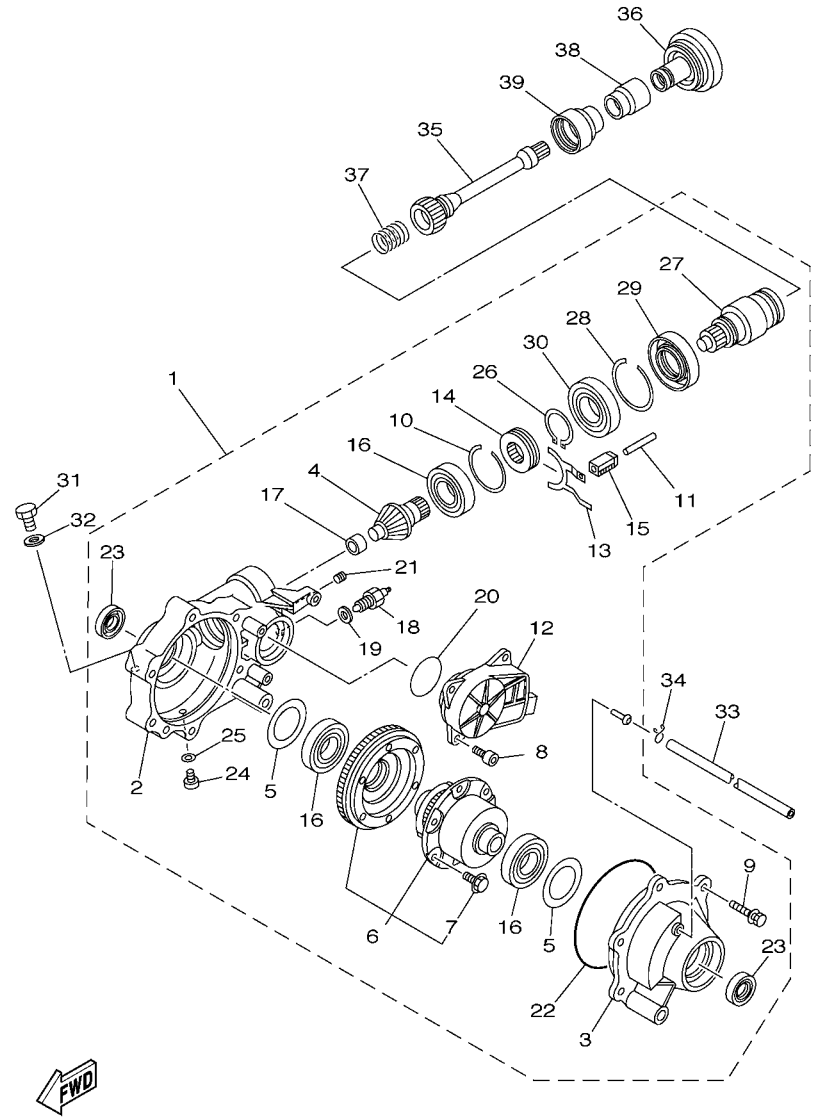

FIG. 26 FRONT DIFFERENTIAL

REF. NO.	PART NO.	DESCRIPTION	USA					REMARKS
23	3B4–46163–00	.SEAL, OIL 1	2					
24	90340–10001	.PLUG, STRAIGHT SCREW	1					
25	90430–10003	.GASKET	1					
26	93450–44141	.CIRCLIP	1					
27	5GH–46126–01	.COUPLING	1					
28	93450–71142	.CIRCLIP	1					
29	5TE–46163–00	.SEAL, OIL 1	1					
30	93316–00801	.BEARING	1					
31	90340–14029	PLUG, STRAIGHT SCREW	1					
32	214–11198–01	GASKET	1					
33	90445–070J5	HOSE (L590)	1					
34	90467–07029	CLIP	1					
35	5TE–G6173–10	SHAFT, DRIVE 2	1					
36	5GH–46123–00	COUPLING, GEAR	1					
37	90501–296L7	SPRING, COMPRESSION	1					
38	5GH–46136–00	SEAL 1	1					
39	5KM–46137–00	SEAL 2	1					

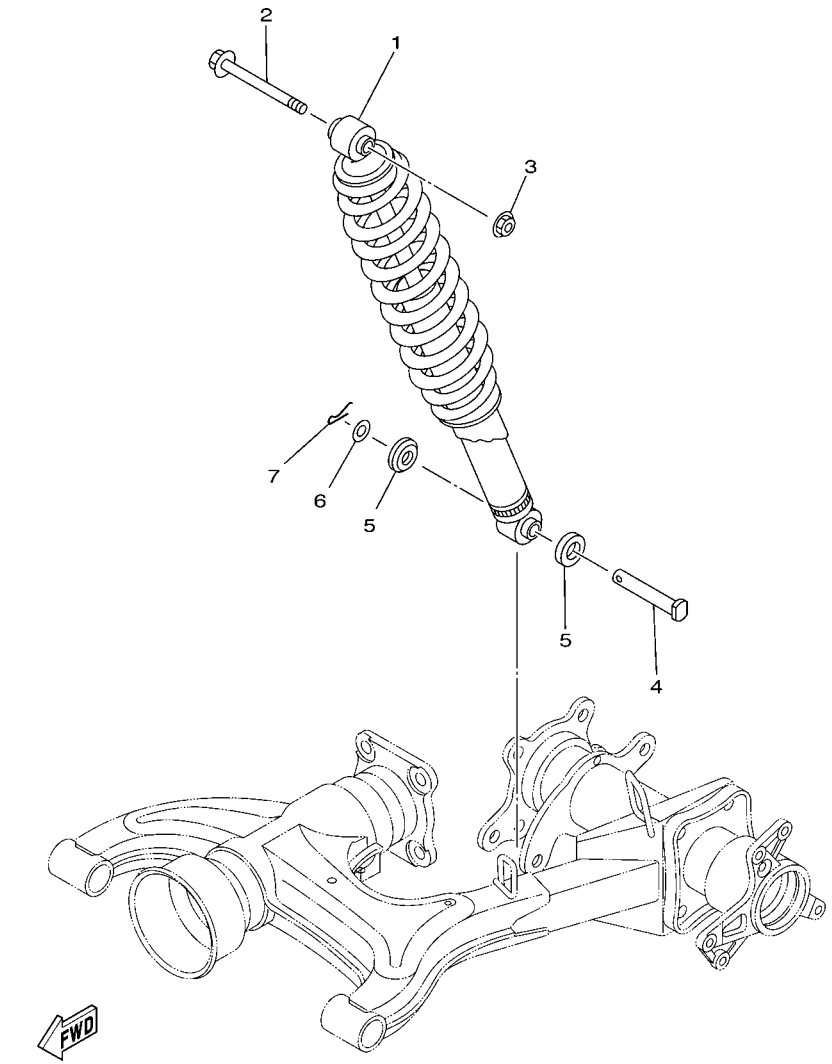

5ND1100-3280

FIG. 27 REAR SUSPENSION

REF. NO.	PART NO.	DESCRIPTION	USA					REMARKS
1	3C2–F2210–00	SHOCK ABSORBER ASSY, REAR	1					
2	90105–12803	BOLT, FLANGE	1					
3	90185–12009	NUT, SELF-LOCKING	1					
4	90240–12092	PIN, CLEVIS	1					
5	1W1–22128–00	COVER, THRUST 1	2					
6	90201–12049	WASHER, PLATE	1					
7	91402–30025	PIN, COTTER	1					

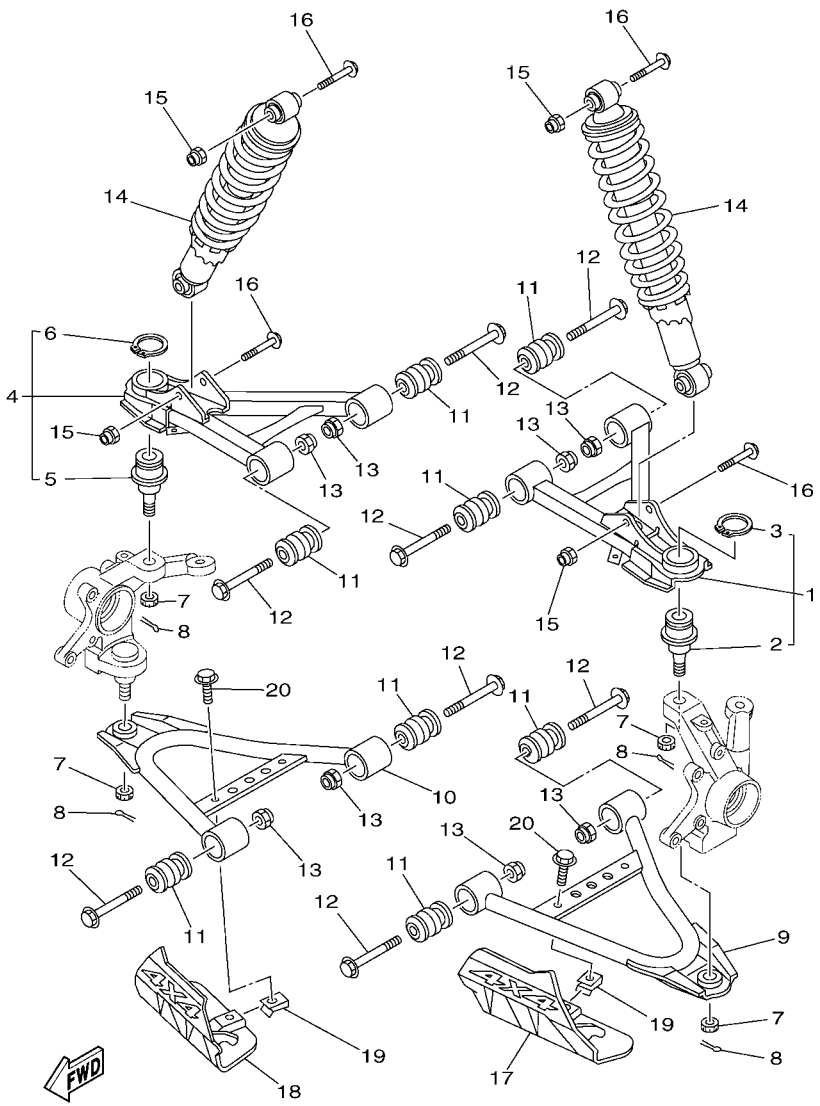

FIG. 28 FRONT SUSPENSION & WHEEL

REF. NO.	PART NO.	DESCRIPTION	USA					REMARKS
1	5ND–F3540–12	FRONT UPPER ARM COMP. (LEFT)	1					
2	5FU–F3549–00	.BALL JOINT 1	1					
3	93410–32826	.CIRCLIP	1					
4	5ND–F3550–12	FRONT UPPER ARM COMP. (RIGHT)	1					
5	5FU–F3549–00	.BALL JOINT 1	1					
6	93410–32826	.CIRCLIP	1					
7	90171–12001	NUT, CASTLE	4					
8	91402–25020	PIN, COTTER	4					
9	5ND–F357A–01	ARM,FR. LWR. LH.	1					
10	5ND–F358A–01	ARM,FR. LWR. RH.	1					
11	2HR–23526–00	BUSH	8					
12	90105–10267	BOLT, FLANGE	8					
13	90185–10012	NUT, SELF-LOCKING	8					
14	3C2–F3350–00	SHOCK ABSORBER ASSY	2					
15	90185–10012	NUT, SELF-LOCKING	4					
16	90105–10841	BOLT, FLANGE	4					
17	17S–F3123–00	COVER, UNDER 1	1					
18	17S–F3133–00	COVER, LOWER 2	1					
19	90183–06053	NUT, SPRING	2					
20	95802–06012	BOLT, FLANGE	2					

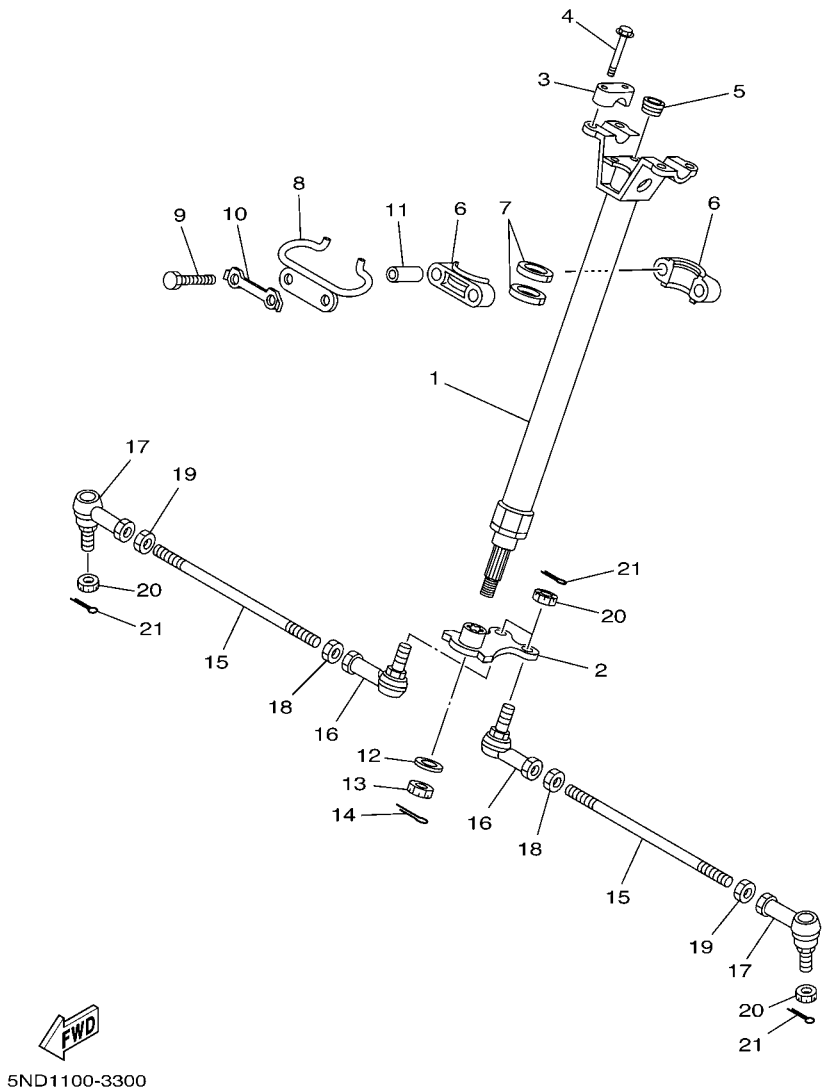

FIG. 29 STEERING

REF. NO.	PART NO.	DESCRIPTION	USA					REMARKS
1	3C2–F3813–00	COLUMN, STEERING 2	1					
2	5ND–F3816–12	ARM, PITMAN	1					
3	8K1–23814–00	HOLDER, HANDLE	2					
4	95812–08030	BOLT, FLANGE	4					
5	90336–28053	PLUG, TAPER	1					
6	1UY–23812–00	PLANE BEARING, STEERING	2					
7	93112–31011	OIL SEAL	2					
8	5ND–F3868–00	BRACKET, STEERING LOWER	1					
9	97022–08060	BOLT	2					
10	1UY–23894–01	WASHER, LOCK 1	1					
11	90387–090R0	COLLAR	2					
12	90201–14021	WASHER, PLATE	1					
13	90185–14009	NUT, SELF-LOCKING	1					
14	91402–20025	PIN, COTTER	1					
15	5ND–F3831–00	ROD, TIE	2					
16	1D9–F3841–01	JOINT, UNIVERSAL 1	2					
17	5ND–F3845–01	JOINT, UNIVERSAL 2	2					
18	4XE–F3833–00	NUT 1	2					
19	4XE–F3834–00	NUT 2	2					
20	90171–12001	NUT, CASTLE	4					
21	91402–25020	PIN, COTTER	4					

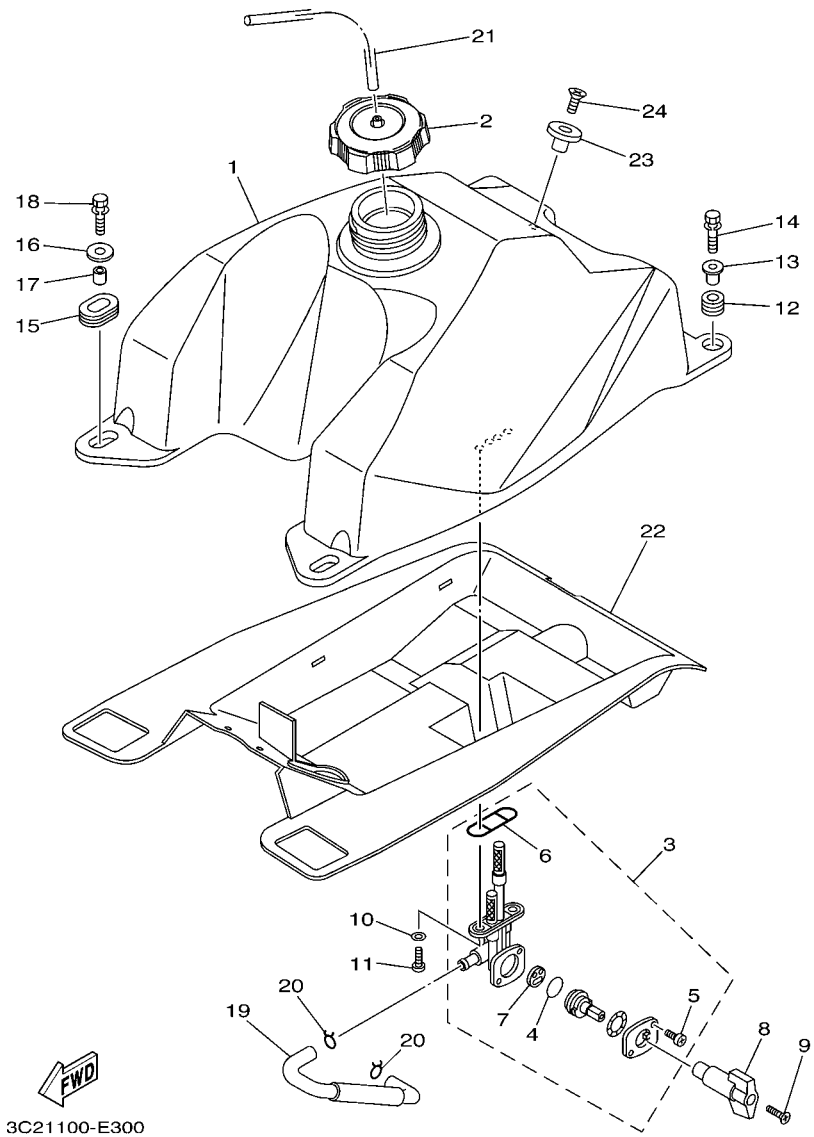

FIG. 30 FUEL TANK

REF. NO.	PART NO.	DESCRIPTION	USA					REMARKS
1	3C2–F4110–10	FUEL TANK COMP.	1					
2	5KM–24610–00	CAP ASSY	1					
3	3C2–24500–00	FUEL COCK ASSY 1	1					
4	3AJ–24534–01	.SEAL, COCK	1					
5	98507–03008	.SCREW, PAN HEAD	2					
6	4X8–24512–00	.O-RING	1					
7	3AC–24523–00	.VALVE PACKING	1					
8	3HE–24524–00	LEVER, COCK	1					
9	98702–04018	SCREW, FLAT HEAD	1					
10	90202–05193	WASHER, PLATE	2					
11	90149–06108	SCREW	2					
12	90480–18290	GROMMET	2					
13	90387–066J1	COLLAR	2					
14	90119–06883	BOLT, WITH WASHER	2					
15	90480–01400	GROMMET	2					
16	90201–06090	WASHER, PLATE	2					
17	90387–07598	COLLAR	2					
18	90119–06883	BOLT, WITH WASHER	2					
19	3C2–24311–00	PIPE, FUEL 1	1					
20	90467–100A1	CLIP	2					
21	90445–088C5	HOSE (L400)	1					
22	3C2–F414H–00	DAMPER, PLATE 1	1					
23	4EW–2412F–00	BRACKET, SEAT	1					
24	90151–06010	SCREW, COUNTERSUNK	1					

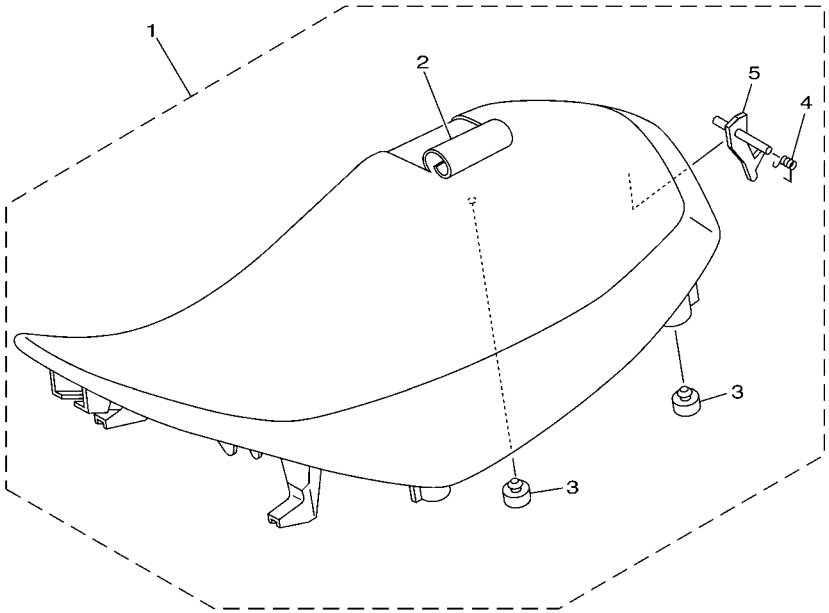

3C21100-E310

FIG. 31 SEAT

REF. NO.	PART NO.	DESCRIPTION	USA					REMARKS
1	3C2–F4710–00	SINGLE SEAT ASSY	1					
2	3C2–F4731–00	.COVER, SEAT	1					
3	4XE–F4747–00	.DAMPER, SEAT	2					
4	4XE–F478V–00	.SPRING, TORSION	1					
5	3C2–F4776–00	.LEVER, SEAT	1					

FIG. 32 FRONT WHEEL

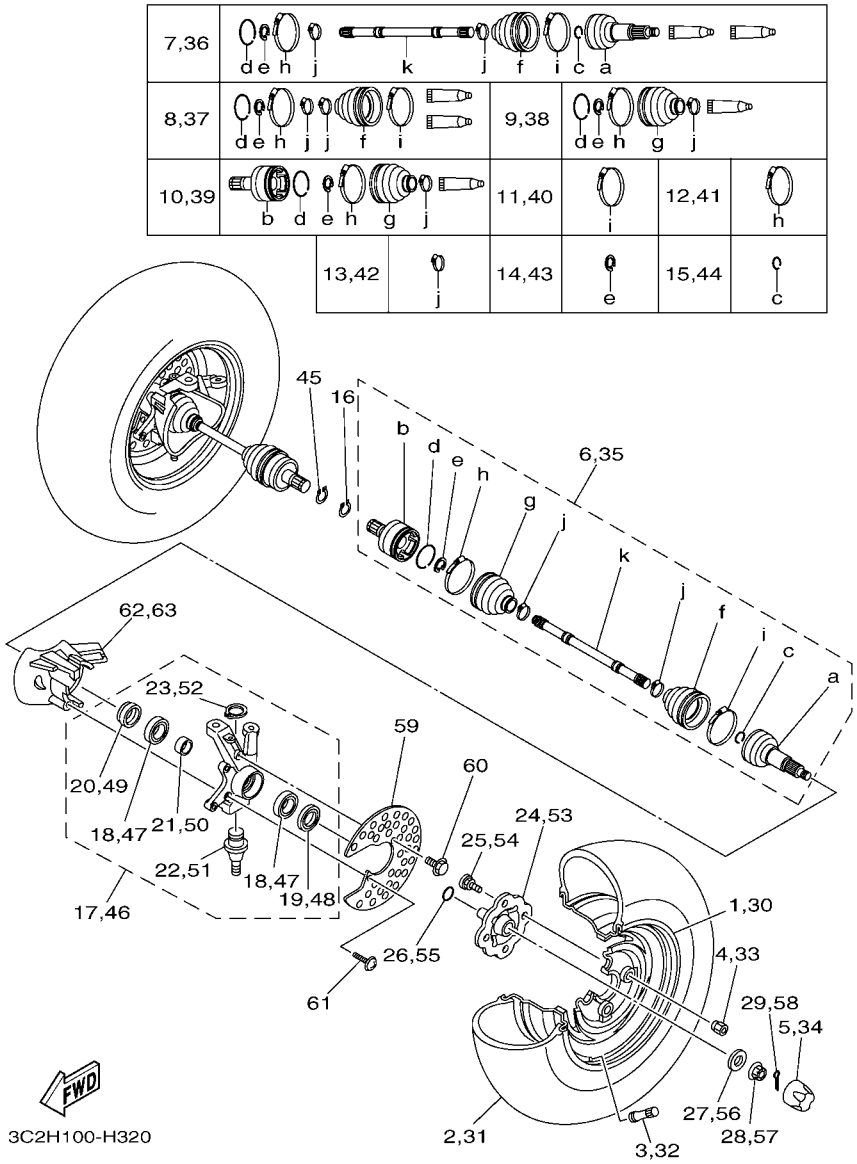

REF. NO.	PART NO.	DESCRIPTION	USA					REMARKS
1	3C2–F5180–10	WHEEL COMP.	1					
2	94108–12814	TIRE (AT23X8R12 M937)	1					CHENG SHIN
3	93900–00813	VALVE, RIM (TR413)	1					
4	90179–10020	NUT	4					
5	5GT–2512A–00	CAP, WHEEL	1					
6	5TE–F518F–00	DRIVE SHAFT ASSY	1					
7	5TE–F510F–00	.BALL JOINT SET	1					
8	5GH–2510G–00	.BOOT SET (BALL JOINT)	1					
9	3HN–2510H–00	.BOOT SET(DOUBLE OFFSET JOINT)	1					
10	5GH–2510J–00	.DOUBLE OFF SET JOINT	1					
11	3HN–2511G–01	.BOOT BAND (BALL JOINT)	1					
12	3HN–2511H–00	.BOOT BAND(DOUBLE OFFSETJOINT)	1					
13	3HN–2512G–01	.BOOT BAND (SMALL)	2					
14	2HR–2512J–00	.SNAP RING	1					
15	4KB–2512H–00	.CIRCLIP	1					
16	93450–22119	CIRCLIP	1					
17	5ND–F3501–10	STEERING KNUCKLE ASSY (LEFT)	1					
18	93306–006Y2	.BEARING	2					
19	93106–38046	.OIL SEAL	1					
20	93106–38047	.OIL SEAL	1					
21	90560–30325	.SPACER	1					
22	5FU–F3549–00	.BALL JOINT 1	1					
23	99009–32400	.CIRCLIP	1					
24	5ND–F5111–21	HUB, FRONT	1					
25	90114–10014	BOLT, SERRATION	4					
26	93210–27666	O-RING	1					
27	90201–16804	WASHER, PLATE	1					

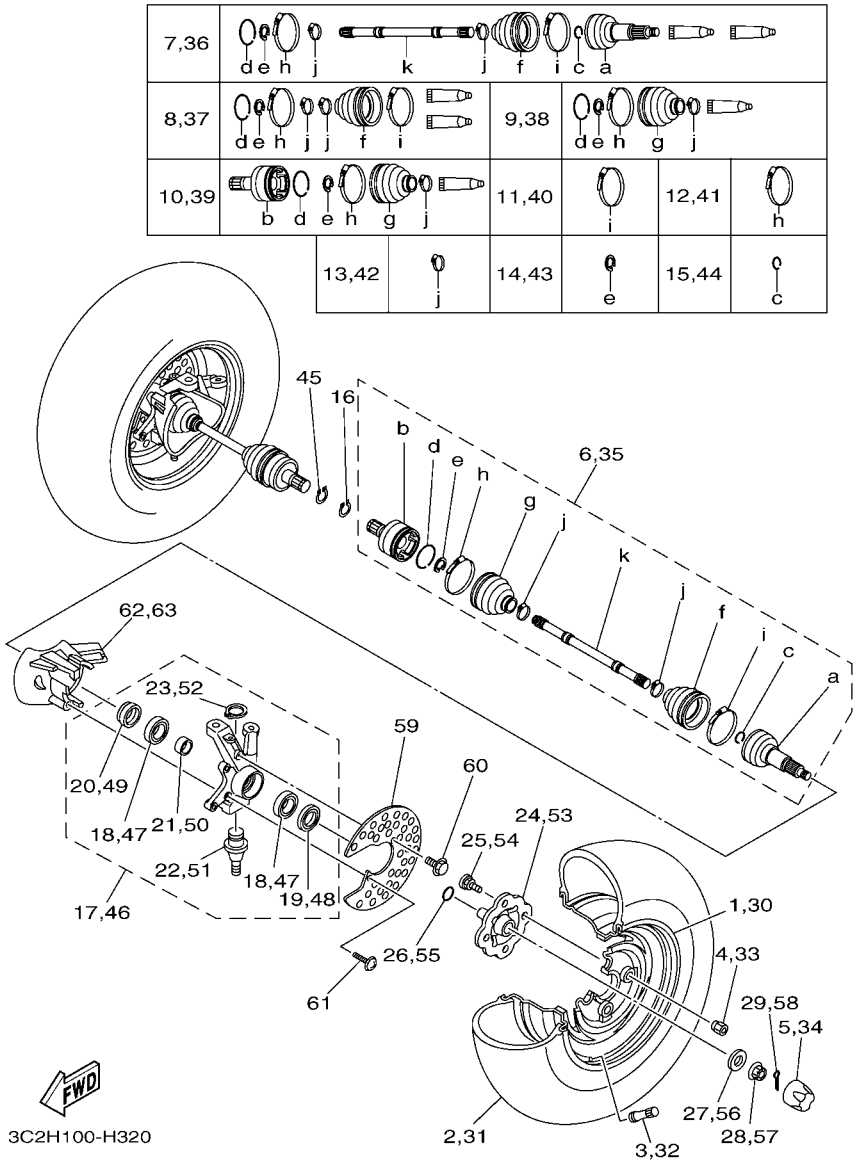

FIG. 32 FRONT WHEEL

REF. NO.	PART NO.	DESCRIPTION	USA					REMARKS
28	90171–16002	NUT, CASTLE	1					
29	91402–30030	PIN, COTTER	1					
30	3C2–F5180–10	WHEEL COMP.	1					
31	94108–12814	TIRE (AT23X8R12 M937)	1					CHENG SHIN
32	93900–00813	VALVE, RIM (TR413)	1					
33	90179–10020	NUT	4					
34	5GT–2512A–00	CAP, WHEEL	1					
35	5TE–F518F–00	DRIVE SHAFT ASSY	1					
36	5TE–F510F–00	.BALL JOINT SET	1					
37	5GH–2510G–00	.BOOT SET (BALL JOINT)	1					
38	3HN–2510H–00	.BOOT SET(DOUBLE OFFSET JOINT)	1					
39	5GH–2510J–00	.DOUBLE OFF SET JOINT	1					
40	3HN–2511G–01	.BOOT BAND (BALL JOINT)	1					
41	3HN–2511H–00	.BOOT BAND(DOUBLE OFFSETJOINT)	1					
42	3HN–2512G–01	.BOOT BAND (SMALL)	2					
43	2HR–2512J–00	.SNAP RING	1					
44	4KB–2512H–00	.CIRCLIP	1					
45	93450–22119	CIRCLIP	1					
46	5ND–F3502–10	STEERING KNUCKLE ASSY (RIGHT)	1					
47	93306–006Y2	.BEARING	2					
48	93106–38046	.OIL SEAL	1					
49	93106–38047	.OIL SEAL	1					
50	90560–30325	.SPACER	1					
51	5FU–F3549–00	.BALL JOINT 1	1					
52	99009–32400	.CIRCLIP	1					
53	5ND–F5111–21	HUB, FRONT	1					
54	90114–10014	BOLT, SERRATION	4					

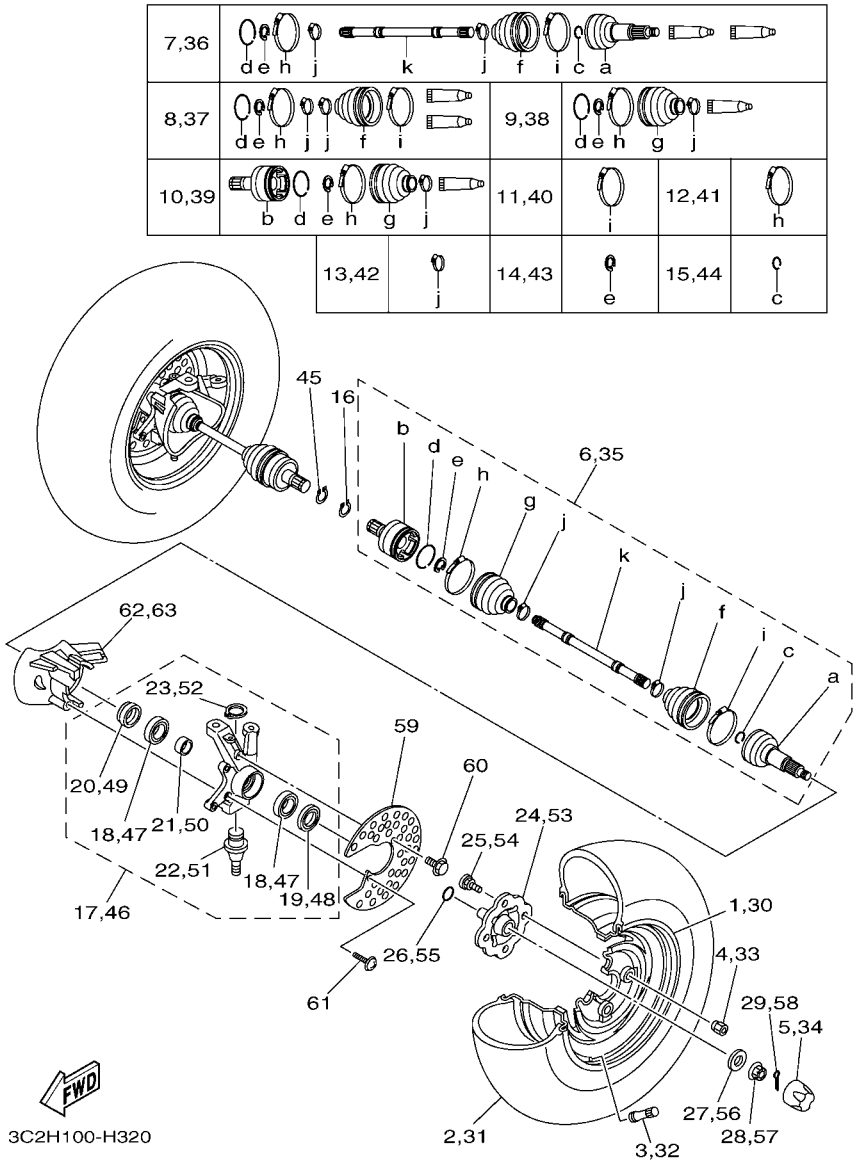

FIG. 32 FRONT WHEEL

REF. NO.	PART NO.	DESCRIPTION	USA					REMARKS
55	93210–27666	O-RING	1					
56	90201–16804	WASHER, PLATE	1					
57	90171–16002	NUT, CASTLE	1					
58	91402–30030	PIN, COTTER	1					
59	5ND–F514A–00	RING, WHEEL 1	2					
60	95822–06012	BOLT, FLANGE	2					
61	90160–05007	SCREW, ROUND TAPPING	2					
62	4S2–F2327–00	MUD GUARD 1	1					LH
63	4S2–F2328–00	MUD GUARD 2	1					RH

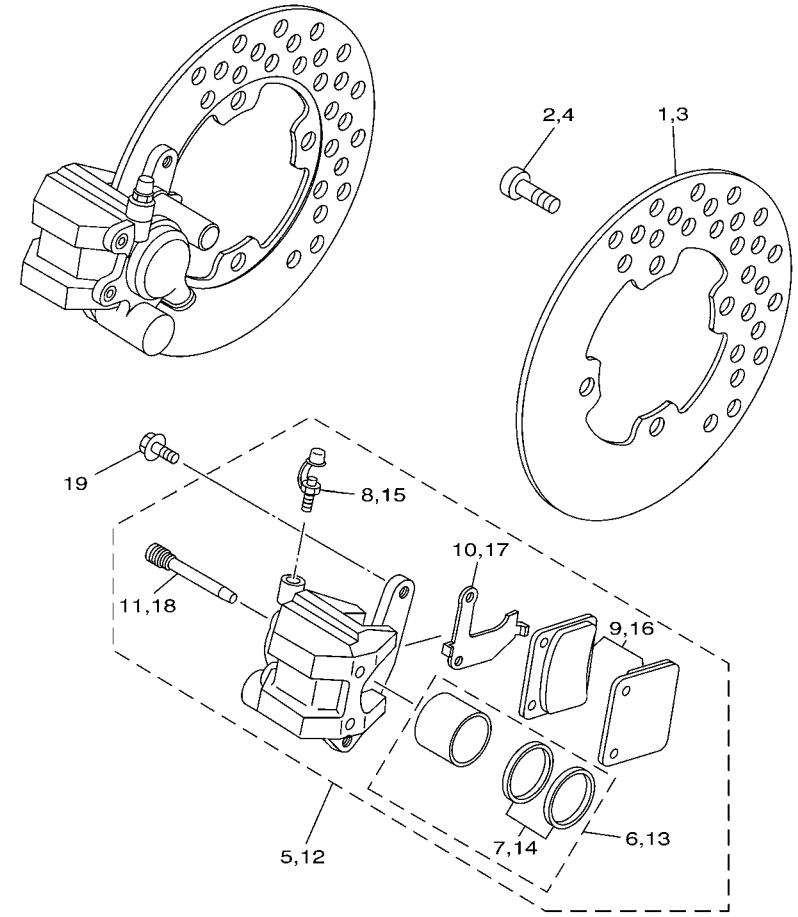

5ND1100-3340

FIG. 33 FRONT BRAKE CALIPER

REF. NO.	PART NO.	DESCRIPTION	USA					REMARKS
1	5ND–F582T–00	DISC, BRAKE (LEFT)	1					
2	90109–08082	BOLT	4					
3	5ND–F582T–00	DISC, BRAKE (LEFT)	1					
4	90109–08082	BOLT	4					
5	3GD–2580T–00	CALIPER ASSY (LEFT)	1					
6	3GD–W0057–00	.PISTON ASSY, CALIPER	1					
7	3GD–W0047–00	..CALIPER SEAL KIT	1					
8	1UY–W0048–50	.BLEED SCREW KIT	1					
9	3GD–W0045–00	.BRAKE PAD KIT	1					
10	3GD–25827–00	.SHIM, CALIPER	1					
11	3GD–25933–00	.PIN, PAD	2					
12	3GD–2580U–00	CALIPER ASSY (RIGHT)	1					
13	3GD–W0057–00	.PISTON ASSY, CALIPER	1					
14	3GD–W0047–00	..CALIPER SEAL KIT	1					
15	1UY–W0048–50	.BLEED SCREW KIT	1					
16	3GD–W0045–00	.BRAKE PAD KIT	1					
17	3GD–25828–00	.SHIM, CALIPER	1					
18	3GD–25933–00	.PIN, PAD	2					
19	90105–08161	BOLT, FLANGE	4					

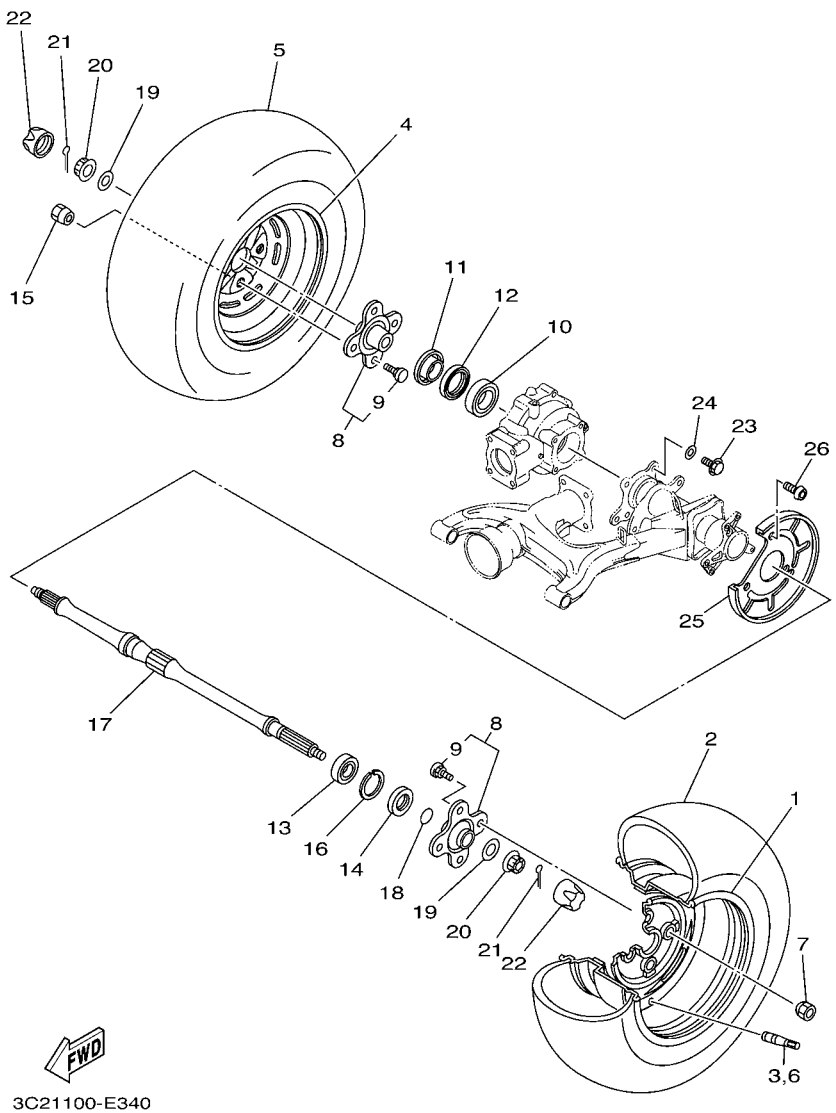

FIG. 34 REAR WHEEL

REF. NO.	PART NO.	DESCRIPTION	USA					REMARKS
1	3C2–F5390–10	REAR WHEEL COMP.	1					
2	94110–12811	TIRE (AT23X10R12 M938)	1					CHENG SHIN
3	93900–00813	VALVE, RIM (TR413)	1					
4	3C2–F5390–10	REAR WHEEL COMP.	1					
5	94110–12811	TIRE (AT23X10R12 M938)	1					CHENG SHIN
6	93900–00813	VALVE, RIM (TR413)	1					
7	90179–10020	NUT	4					
8	5ND–F5383–11	COLLAR, WHEEL	2					
9	1P0–F5411–00	.BOLT	4					
10	93306–008Y0	BEARING	1					
11	4SH–25367–01	COVER, HUB DUST	1					
12	93106–47040	OIL SEAL	1					
13	93306–006Y2	BEARING	1					
14	93106–38046	OIL SEAL	1					
15	90179–10020	NUT	4					
16	99009–55500	CIRCLIP	1					
17	5ND–F5381–01	AXLE, WHEEL	1					
18	93210–27666	O-RING	1					
19	90201–16804	WASHER, PLATE	2					
20	90171–16002	NUT, CASTLE	2					
21	91402–30030	PIN, COTTER	2					
22	5GT–2512A–00	CAP, WHEEL	2					
23	90105–10287	BOLT, FLANGE	4					
24	90201–10035	WASHER, PLATE	4					
25	5ND–F5718–00	PROTECTOR, DISK BRAKE	1					
26	92012–06012	BOLT, BUTTON HEAD	3					

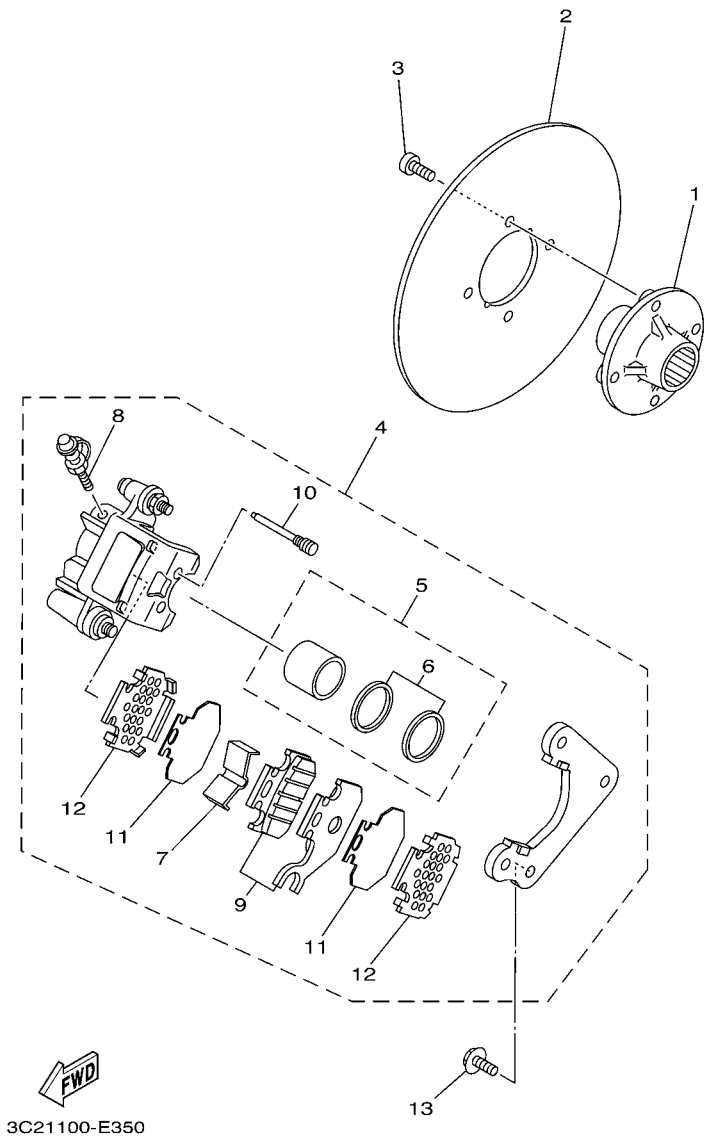

FIG. 35 REAR BRAKE CALIPER

REF. NO.	PART NO.	DESCRIPTION	USA					REMARKS
1	5ND–F5712–10	BRACKET, DISC	1					
2	5ND–F5831–10	DISC, BRAKE (LEFT)	1					
3	90109–081F0	BOLT	4					
4	3C2–2580V–00	CALIPER ASSY, REAR 1	1					
5	3TB–W0057–00	.PISTON ASSY, CALIPER	1					
6	3GD–W0047–00	..CALIPER SEAL KIT	1					
7	4GY–25919–50	.SUPPORT, PAD	1					
8	1UY–W0048–50	.BLEED SCREW KIT	1					
9	3C2–W0046–00	.BRAKE PAD KIT 2	1					
10	5GH–25924–00	.PIN, PAD	2					
11	4GY–22898–50	.INSULATOR, HEAT	2					
12	5GH–25828–00	.SHIM, CALIPER	2					
13	90105–08161	BOLT, FLANGE	2					

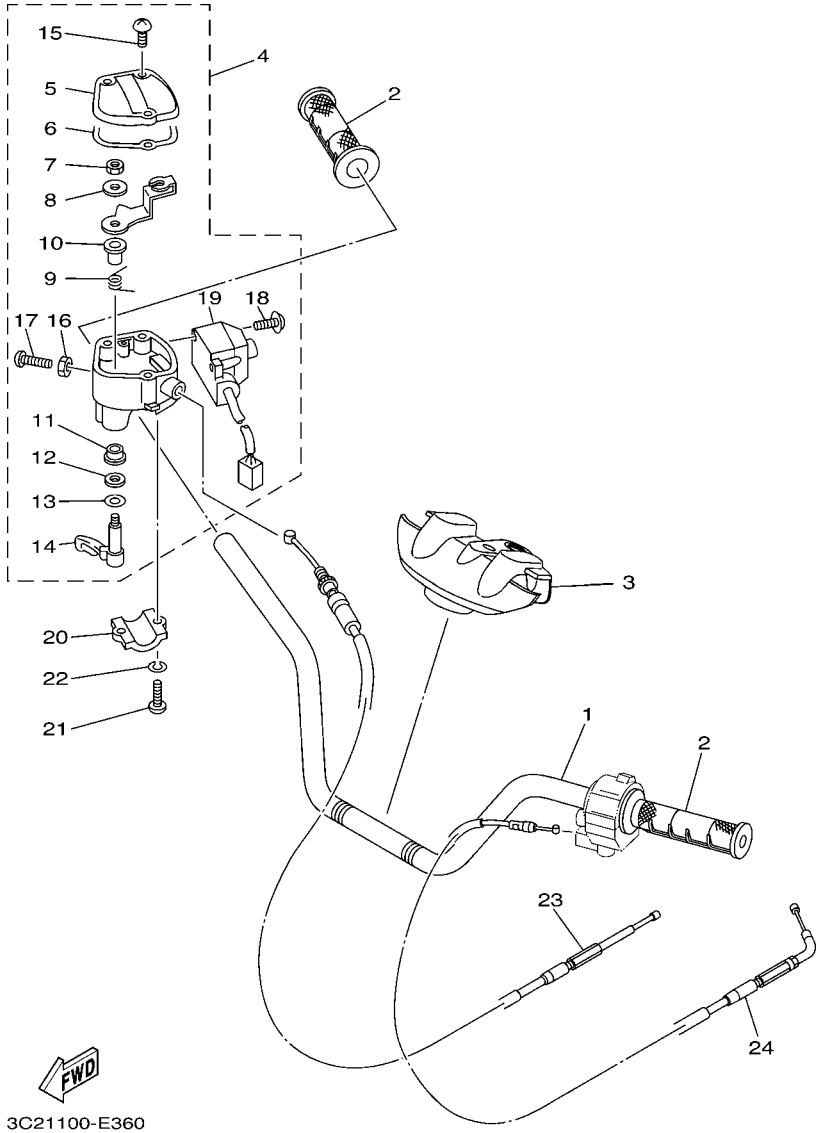

FIG. 36 STEERING HANDLE & CABLE

REF. NO.	PART NO.	DESCRIPTION	USA					REMARKS
1	3C2–F6111–00	HANDLEBAR	1					
2	5FU–F6241–10	GRIP	2					
3	5ND–F6124–00	PROTECTOR, HANDLEBAR	1					
4	1P1–26250–00	THROTTLE LEVER ASSY	1					
5	4KB–2628F–10	.CAP, GEAR	1					
6	4KB–2628G–00	.GASKET	1					
7	95607–05100	.NUT, U	1					
8	1NV–26398–00	.WASHER	1					
9	1NV–26304–00	.SPRING	1					
10	1NV–26259–01	.COLLAR	1					
11	1NV–2625K–00	.COLLAR	1					
12	93104–09025	.OIL SEAL	1					
13	1NV–26129–00	.WASHER	1					
14	1NV–2625G–01	.LEVER, THROTTLE	1					
15	90149–04278	.SCREW	3					
16	95307–05700	.NUT	1					
17	98507–05020	.SCREW, PAN HEAD	1					
18	97607–04210	.SCREW,WITH WASHER	2					
19	1P1–83976–00	.SWITCH, HANDLE 1	1					
20	4V4–82913–00	HOLDER, LEVER LOWER 1	1					
21	98502–05020	SCREW, PAN HEAD	2					
22	92902–05600	WASHER, PLATE	2					
23	5GH–26311–10	CABLE, THROTTLE 1	1					
24	3C2–F6331–00	CABLE, STARTER 1	1					

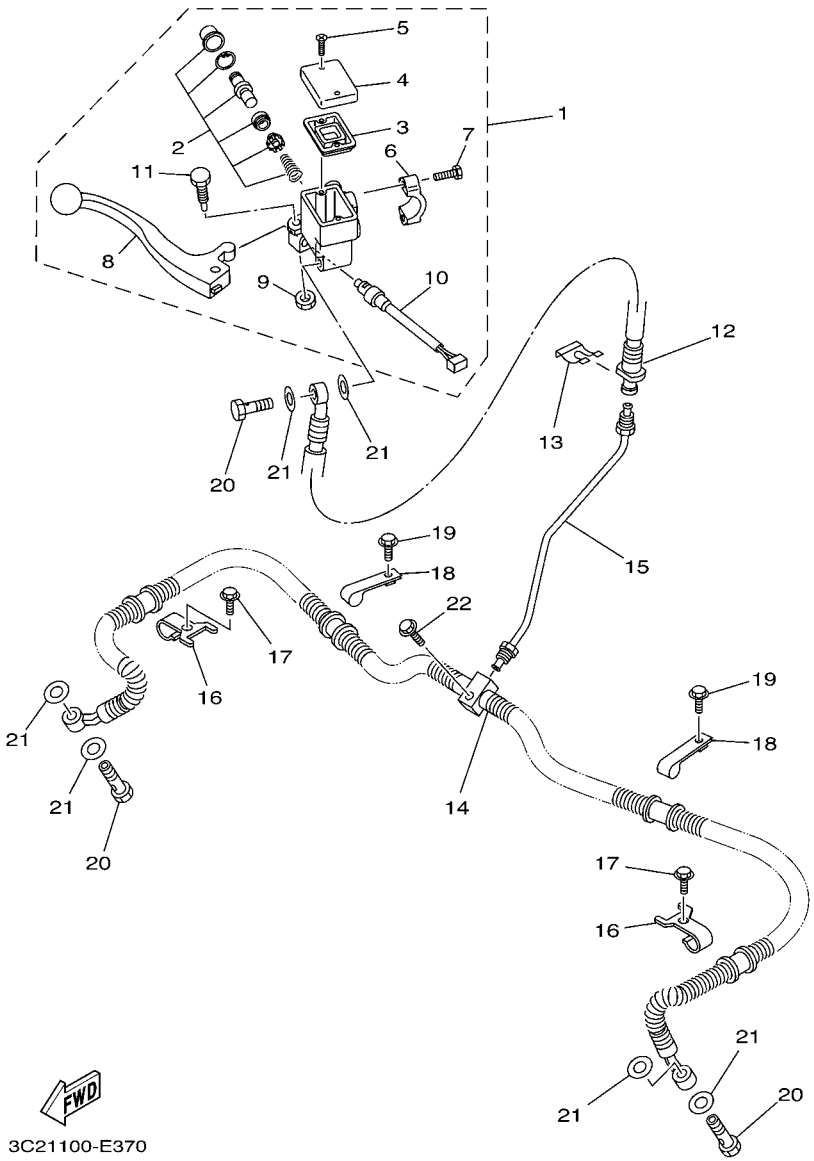

FIG. 37 FRONT MASTER CYLINDER

REF. NO.	PART NO.	DESCRIPTION	USA					REMARKS
1	5KM–2583T–01	MASTER CYLINDER ASSY	1					
2	8CR–W0041–00	.CYLINDER KIT, MASTER	1					
3	4L0–25854–00	.GASKET, DIAPHRAGM	1					
4	5JX–25852–01	.CAP, RESERVOIR	1					
5	98706–04012	.SCREW, FLAT HEAD	2					
6	5GH–25867–00	.HOLDER	1					
7	5EB–26332–00	.BOLT	2					
8	5KM–83922–00	.LEVER 2	1					
9	95606–06100	.NUT, U	1					
10	5LP–83980–00	.FRONT STOP SWITCH ASSY	1					
11	1FK–2589F–00	.BOLT, LEVER	1					
12	3C2–F5872–01	HOSE, BRAKE 1	1					
13	2GU–25866–00	CIRCLIP	1					
14	5ND–F5873–01	HOSE, BRAKE 2	1					
15	5ND–F5871–00	PIPE, BRAKE	1					
16	5ND–F5875–01	HOLDER, BRAKE HOSE 1	2					
17	95822–06012	BOLT, FLANGE	2					
18	5ND–F3192–01	BAND	2					
19	95822–06012	BOLT, FLANGE	2					
20	90401–10015	BOLT, UNION	3					
21	90201–10118	WASHER, PLATE	6					
22	95802–06025	BOLT, FLANGE	1					

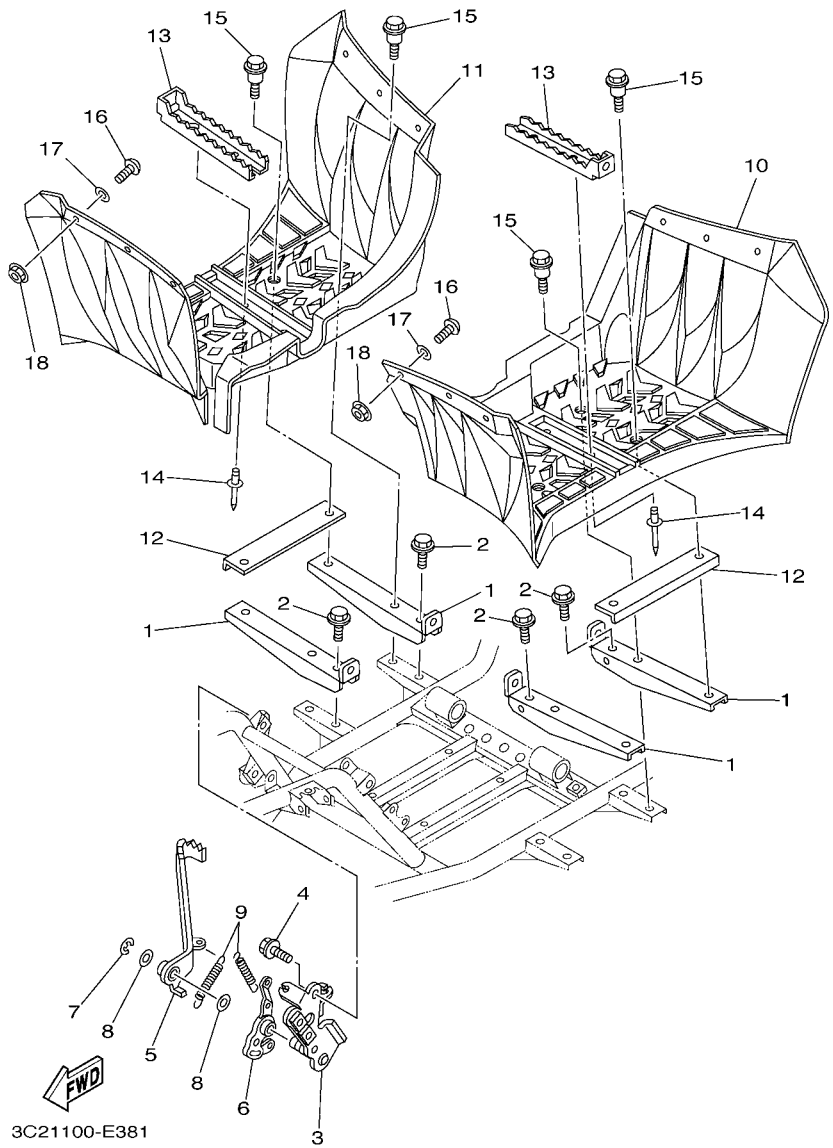

FIG. 38 STAND & FOOTREST

REF. NO.	PART NO.	DESCRIPTION	USA					REMARKS
1	3C2–F7471–00	BAR, FOOTREST 1	4					
2	95812–08012	BOLT, FLANGE	4					
3	5ND–F7412–11	BRACKET, FOOTREST 1	1					
4	95812–08012	BOLT, FLANGE	2					
5	5ND–F7211–10	PEDAL, BRAKE	1					
6	5ND–F7252–11	LEVER, BRAKE PEDAL	1					
7	93430–10015	CIRCLIP	1					
8	90201–14023	WASHER, PLATE	2					
9	90506–12441	SPRING, TENSION	2					
10	3C2–F7453–00	COVER 1	1					
11	3C2–F7463–00	COVER 2	1					
12	5ND–F7445–00	PLATE 1	2					
13	3C2–F741A–00	ARM 1	2					
14	90267–489U9	RIVET, BLIND	4					
15	90109–06262	BOLT	8					
16	90149–05299	SCREW	12					
17	90201–05042	WASHER, PLATE	12					
18	95702–05300	NUT, NYLON	12					

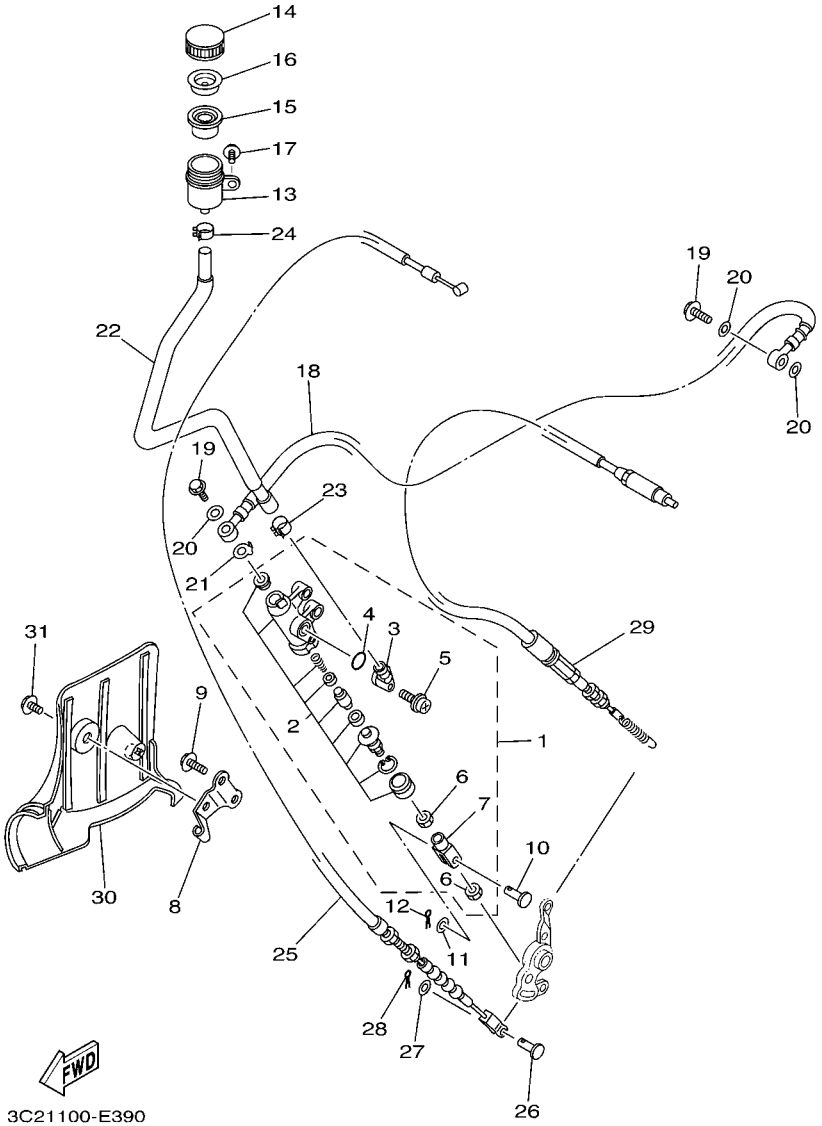

FIG. 39 REAR MASTER CYLINDER

REF. NO.	PART NO.	DESCRIPTION	USA					REMARKS
1	5KM–2583V–00	RR. MASTER CYLINDER ASSY.	1					
2	5KM–W0042–50	.CYLINDER KIT, MASTER	1					
3	31A–2582A–50	.JOINT	1					
4	93210–15620	.O-RING	1					
5	3GM–2589H–00	.SCREW	1					
6	4SS–27218–00	.NUT	2					
7	2YK–27222–00	.JOINT	1					
8	5ND–F637G–00	HOLDER, WIRE	1					
9	95812–08025	BOLT, FLANGE	2					
10	90240–08013	PIN, CLEVIS	1					
11	90201–08066	WASHER, PLATE	1					
12	91402–16012	PIN, COTTER	1					
13	2VN–25894–00	TANK, RESERVOIR	1					
14	4PX–25852–00	CAP, RESERVOIR	1					
15	2VN–25854–00	GASKET, DIAPHRAGM	1					
16	2VN–25855–00	BUSH,DIAPHRAGM	1					
17	90105–06048	BOLT, FLANGE	1					
18	5ND–F5874–01	HOSE, BRAKE	1					
19	90401–10015	BOLT, UNION	2					
20	90201–10118	WASHER, PLATE	3					
21	5GH–25844–00	WASHER, LOCK	1					
22	3C2–F5895–00	HOSE, RESERVOIR	1					
23	90467–140A5	CLIP	1					
24	90467–11044	CLIP	1					
25	3C2–26341–10	WIRE, BRAKE 1	1					
26	90240–06076	PIN, CLEVIS	1					
27	90201–06042	WASHER, PLATE	1					

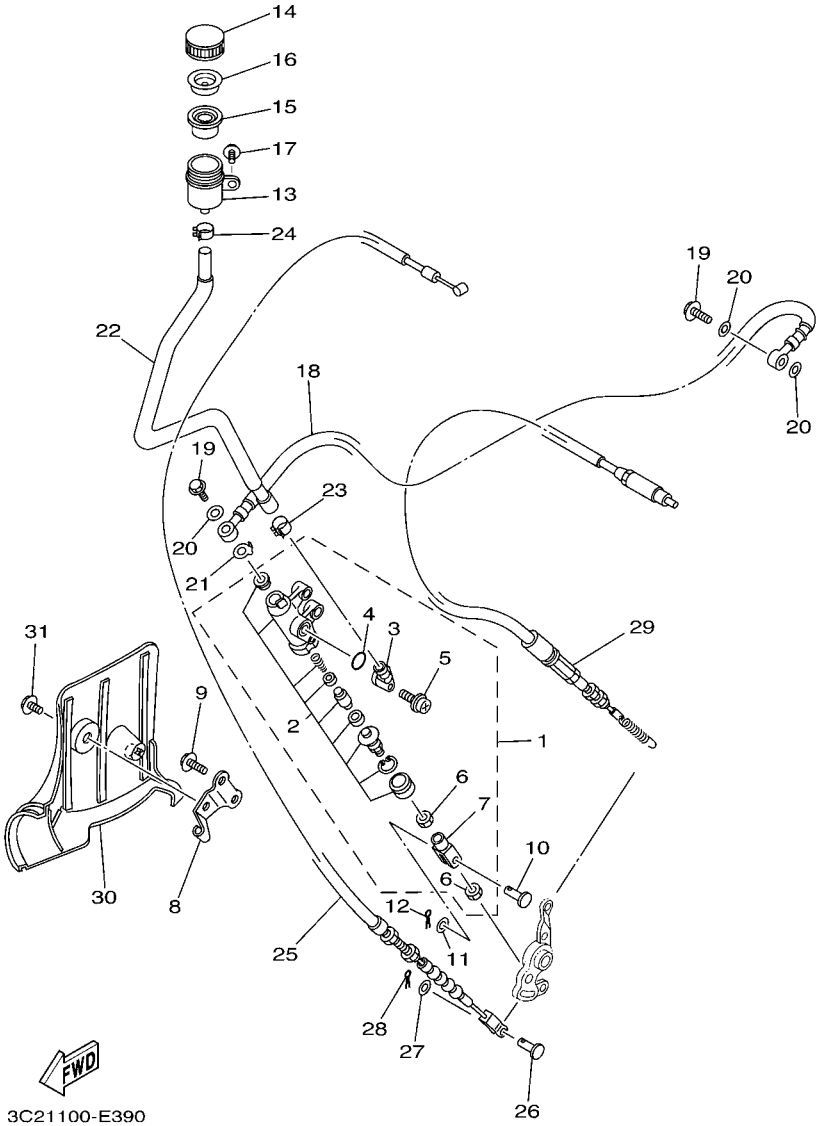

FIG. 39 REAR MASTER CYLINDER

REF. NO.	PART NO.	DESCRIPTION	USA					REMARKS
28	91402–20012	PIN, COTTER	1					
29	5GH–2637F–10	CABLE, CONTROL 2	1					
30	5ND–F7491–00	PROTECTOR	1					
31	95822–06012	BOLT, FLANGE	1					

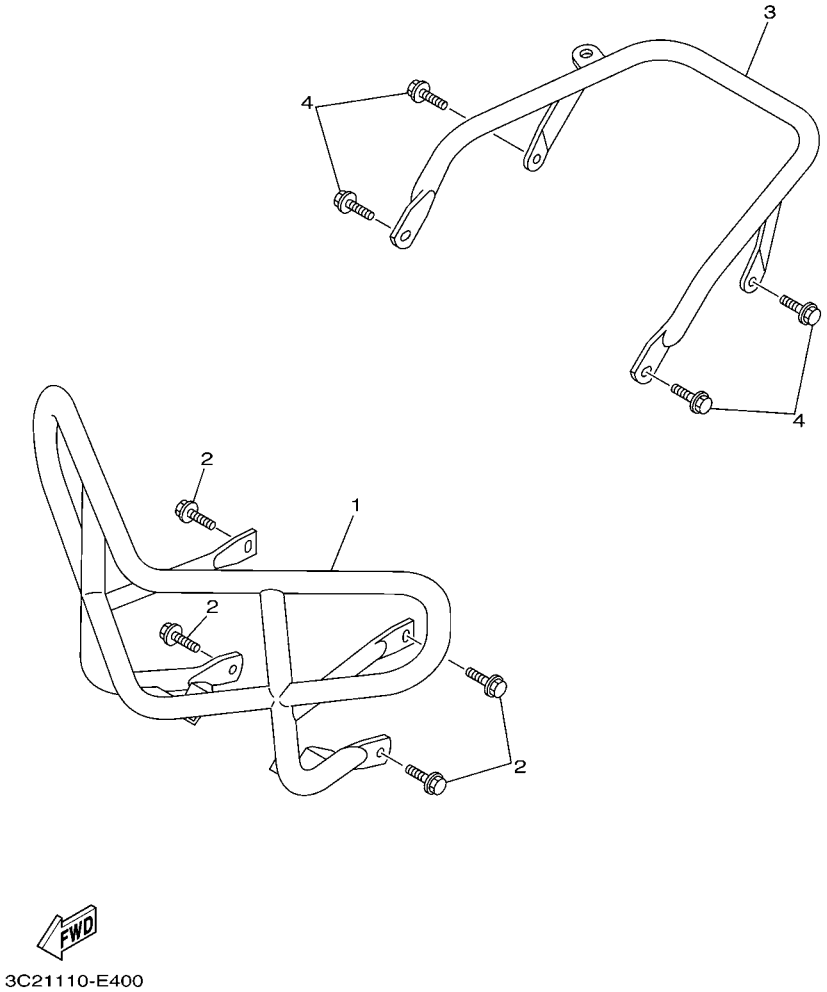

FIG. 40 GUARD

REF. NO.	PART NO.	DESCRIPTION	USA					REMARKS
1	3C2–F845N–00	BAR, CARRY FRONT	1					
2	95812–08012	BOLT, FLANGE	4					
3	3C2–F845R–00	BAR, CARRY REAR	1					
4	95812–08012	BOLT, FLANGE	4					

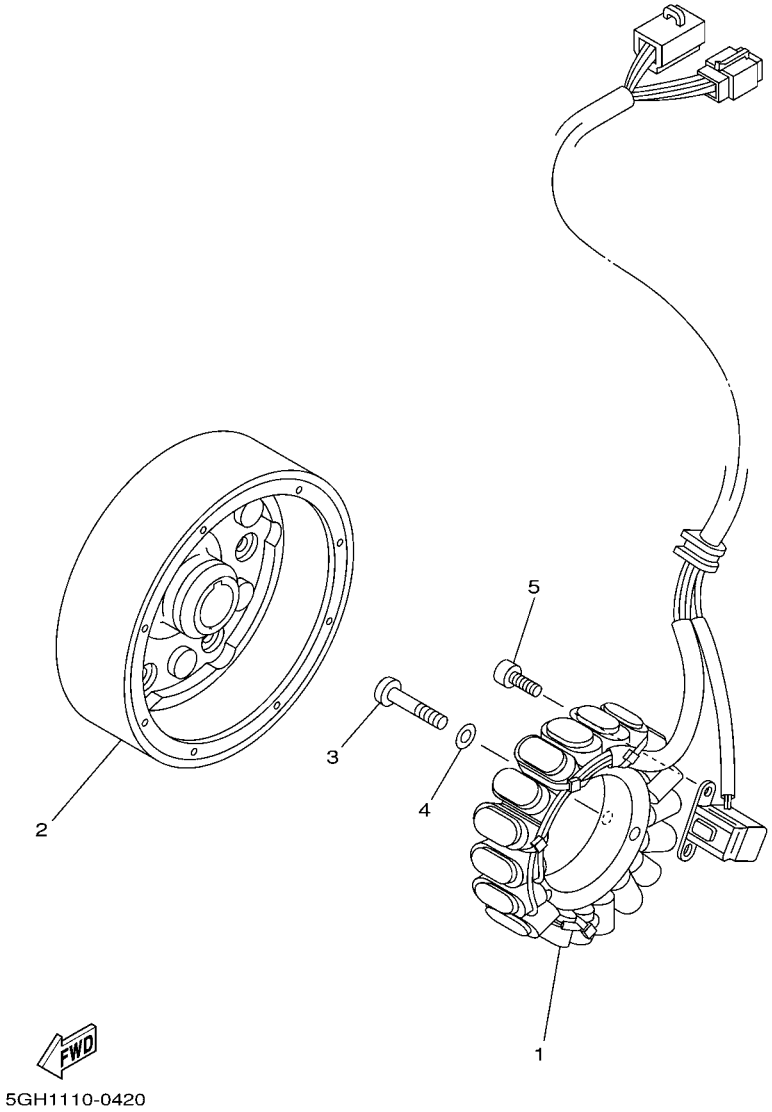

FIG. 41 GENERATOR

REF. NO.	PART NO.	DESCRIPTION	USA					REMARKS
1	5ND–81410–00	STATOR ASSY	1					
2	5GH–81450–01	ROTOR ASSY	1					
3	92502–06030	SCREW, PAN HEAD	3					
4	92902–06600	WASHER, PLATE	3					
5	91312–05012	BOLT	2					

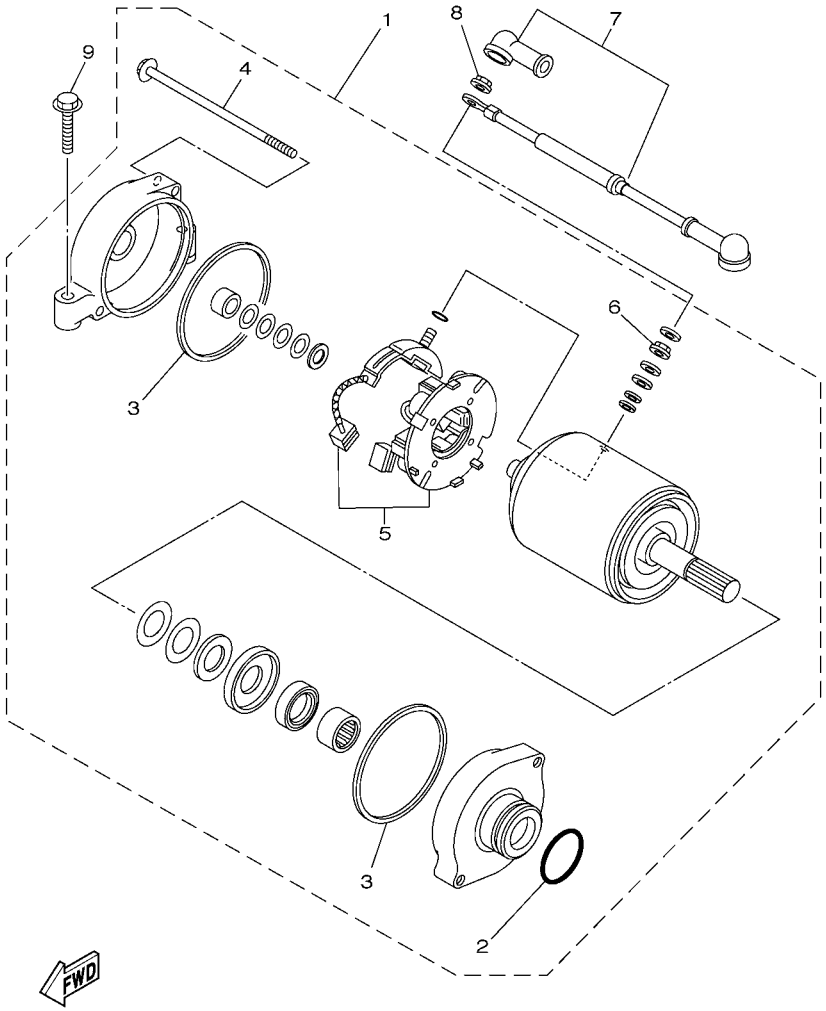

5ND6100-C440

FIG. 42 STARTING MOTOR

REF. NO.	PART NO.	DESCRIPTION	USA					REMARKS
1	5KM–81890–00	MOTOR ASSY	1					
2	1FK–81847–00	.O-RING	1					
3	11H–81844–00	.GASKET	2					
4	3AJ–81826–00	.BOLT	2					
5	3AJ–81801–00	.BRUSH SET	1					
6	4XV–8182A–00	.NUT	1					
7	5ND–81815–01	CORD, STARTER MOTOR	1					
8	4XV–8182A–00	NUT	1					
9	95022–06030	BOLT, FLANGE	2					

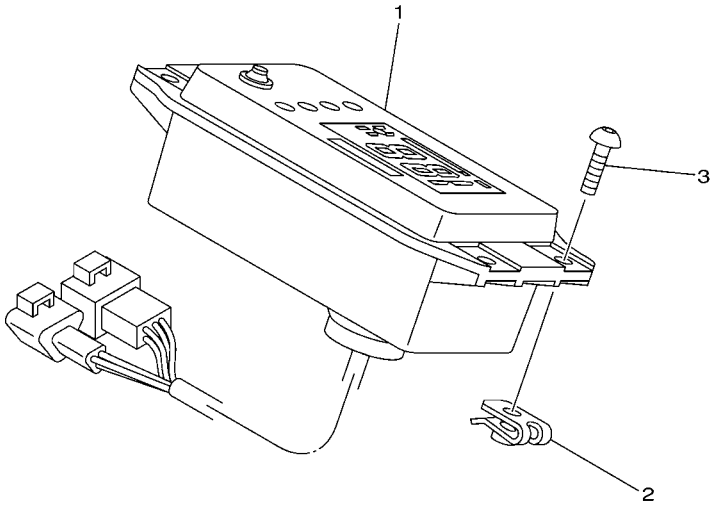

3C21100-E430

FIG. 43 METER

REF. NO.	PART NO.	DESCRIPTION	USA					REMARKS
1	3C2–83500–00	METER ASSY	1					MILE/H
2	90183–050A0	NUT, SPRING	4					
3	92014–05014	BOLT, BUTTON HEAD	4					

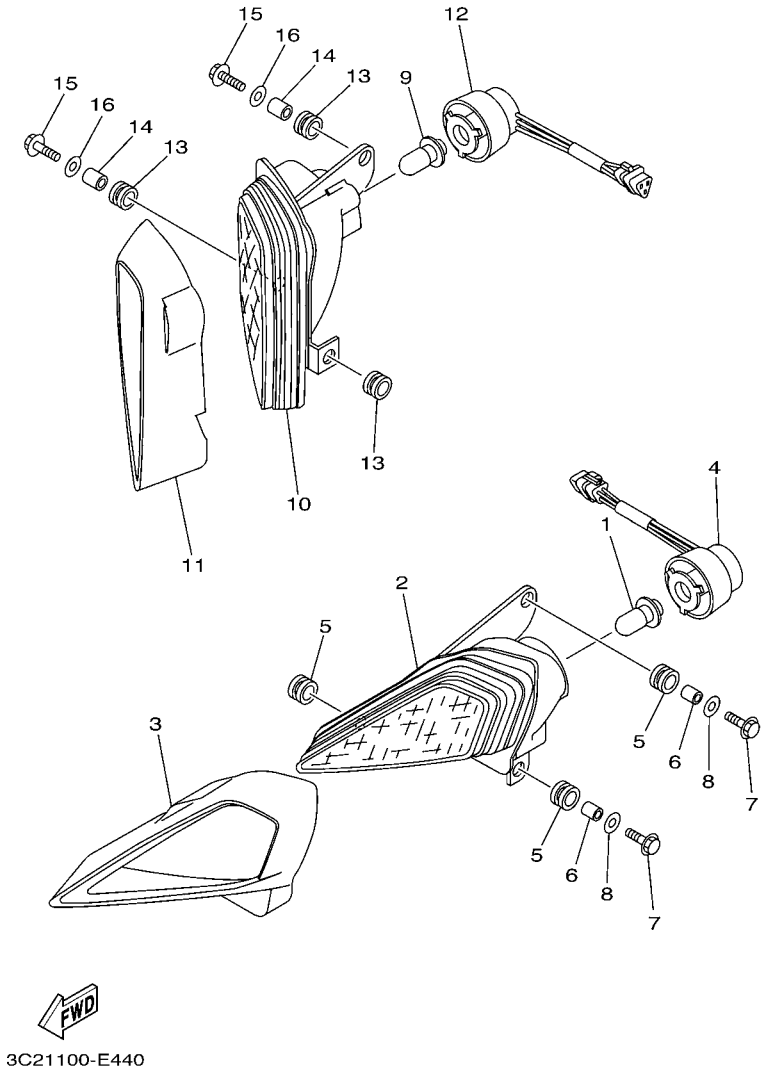

FIG. 44 HEADLIGHT

REF. NO.	PART NO.	DESCRIPTION	USA					REMARKS
1	4KB–84314–01	BULB (12V-30/30W)	1					
2	5TG–84110–03	HEADLIGHT UNIT ASSY	1					
3	5TG–84165–01	RIM, HEADLIGHT COVER 1	1					
4	5TG–84140–01	SOCKET CORD ASSY	1					
5	90480–14102	GROMMET	3					
6	90387–07598	COLLAR	2					
7	90101–06053	BOLT	2					
8	90201–06078	WASHER, PLATE	2					
9	4KB–84314–01	BULB (12V-30/30W)	1					
10	5TG–84310–03	HEADLIGHT UNIT ASSY	1					
11	5TG–84166–01	RIM, HEADLIGHT COVER 2	1					
12	5TG–84340–01	SOCKET CORD ASSY 1	1					
13	90480–14102	GROMMET	3					
14	90387–07598	COLLAR	2					
15	90101–06053	BOLT	2					
16	90201–06078	WASHER, PLATE	2					

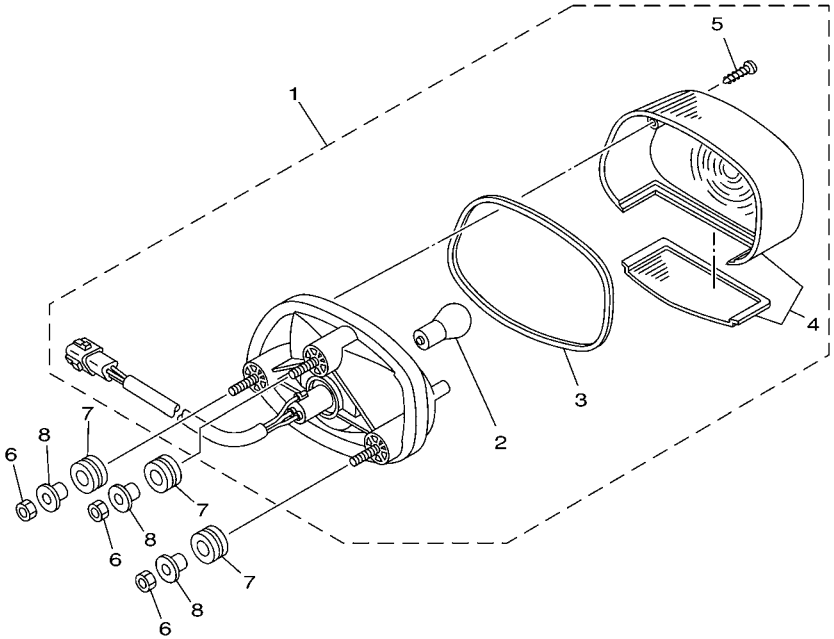

3C21100-E450

FIG. 45 TAILLIGHT

REF. NO.	PART NO.	DESCRIPTION	USA					REMARKS
1	5LP–84700–11	TAILLIGHT ASSY	1					
2	256–84714–60	.BULB (12V-21/5W)	1					
3	4TR–84723–00	.GASKET, TAIL LENS	1					
4	4TR–84733–00	.LENS, TAILLIGHT	1					
5	97702–40620	.SCREW, TAPPING	2					
6	95302–06600	NUT	3					
7	90480–14555	GROMMET	3					
8	90387–07391	COLLAR	3					

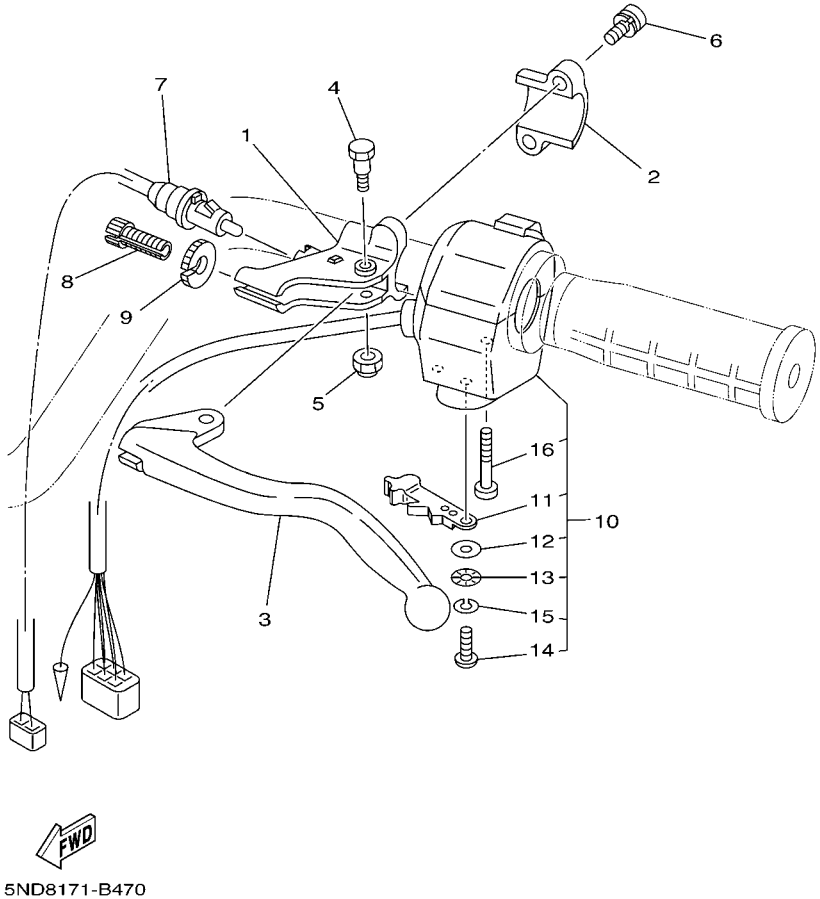

FIG. 46 HANDLE SWITCH & LEVER

REF. NO.	PART NO.	DESCRIPTION	USA					REMARKS
1	1YW–82911–02	HOLDER, LEVER 1	1					
2	2XJ–82913–00	HOLDER, LEVER LOWER 1	1					
3	2HT–83912–00	LEVER 1	1					
4	90109–06799	BOLT	1					
5	95607–06100	NUT, U	1					
6	97607–06120	SCREW,WITH WASHER	2					
7	5KM–82917–00	SWITCH	1					
8	90123–08046	BOLT	1					
9	90179–08148	NUT	1					
10	5LP–83973–01	SWITCH, HANDLE 3	1					
11	5GH–83941–00	.LEVER, STARTER	1					
12	1UY–83909–00	.WASHER, SPECIAL	1					
13	3L4–83943–00	.WASHER, STARTER	1					
14	98517–05012	.SCREW, PAN HEAD	1					
15	92907–05100	.WASHER, SPRING	1					
16	98507–05030	.SCREW, PAN HEAD	2					

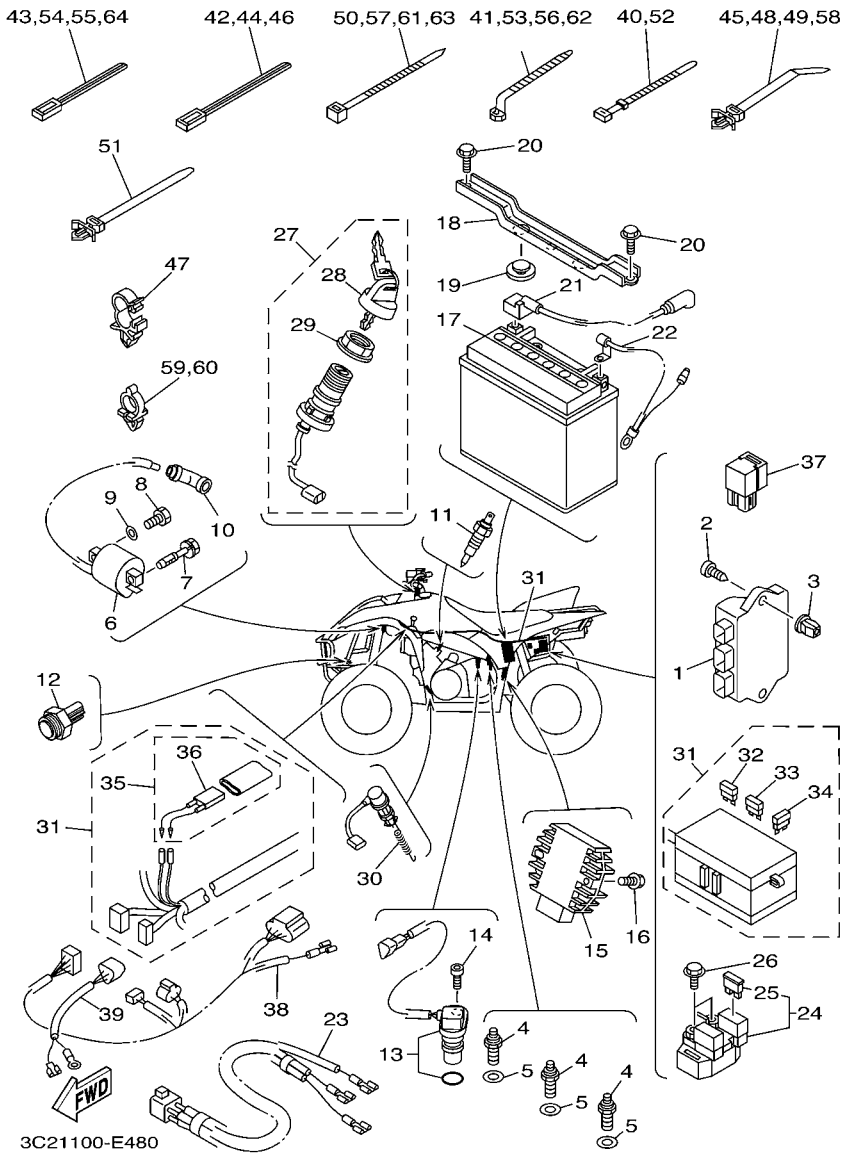

FIG. 47 ELECTRICAL 1

REF. NO.	PART NO.	DESCRIPTION	USA					REMARKS
1	3C2–85540–00	C.D.I. UNIT ASSY	1					
2	97702–60420	SCREW, TAPPING	1					
3	90338–08226	PLUG	1					
4	3GB–82540–01	NEUTRAL SWITCH ASSY	3					
5	90430–10148	GASKET	3					
6	3KJ–82310–10	IGNITION COIL ASSY	1					
7	90109–06865	BOLT	1					
8	97002–06020	BOLT	1					
9	92902–06600	WASHER, PLATE	1					
10	1UY–82370–20	PLUG CAP ASSY	1					
11	5KM–82560–00	THERMO SWITCH ASSY	1					
12	5ND–82560–10	THERMO SWITCH ASSY	1					
13	3C2–83755–00	SENSOR, SPEED	1					
14	90110–06001	BOLT, HEXAGON SOCKET HEAD	1					
15	5GT–81960–00	RECTIFIER & REGULATOR ASSY	1					
16	95802–06020	BOLT, FLANGE	2					
17	5FU–H2100–20	BATTERY ASSY (YUASA YTX20L-BS)	1					
18	5ND–H2128–01	BRACKET, BATTERY	1					
19	371–82121–00	PAD, BATTERY	2					
20	95802–06020	BOLT, FLANGE	2					
21	3C2–H2115–00	WIRE, PLUS LEAD	1					
22	5ND–H2116–00	WIRE, MINUS LEAD	1					
23	1P1–82541–00	WIRE, LEAD	1					
24	4SV–81940–12	STARTER RELAY ASSY	1					
25	1AE–82151–00	.FUSE (30A-BL)	2					
26	95022–06008	BOLT, FLANGE	2					
27	5ND–82510–00	MAIN SWITCH ASSY	1					

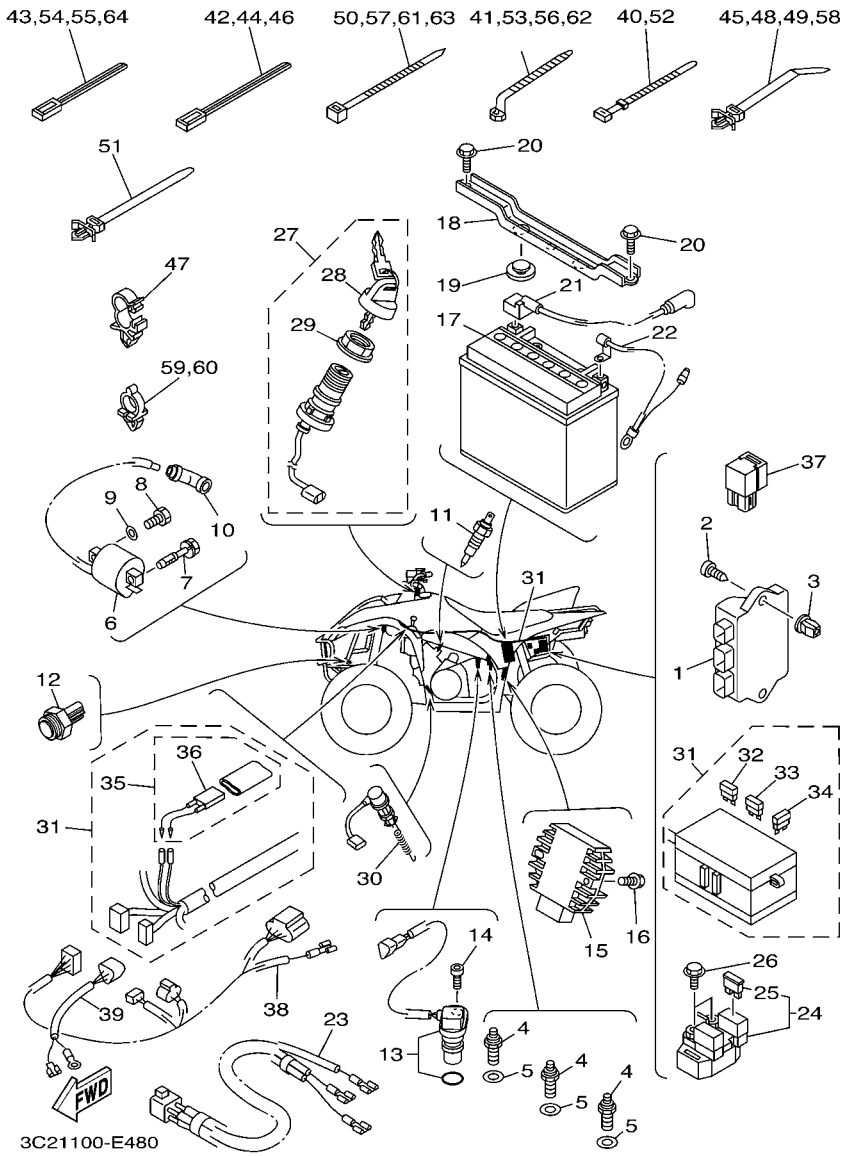

FIG. 47 ELECTRICAL 1

REF. NO.	PART NO.	DESCRIPTION	USA					REMARKS
28	3HN–82579–00	.CAP, KEY	1					
29	3HN–82569–00	.NUT, MAIN SWITCH	1					
30	4KB–82530–10	STOP SWITCH ASSY	1					
31	3C2–82590–00	WIRE HARNESS ASSY	1					
32	5JJ–82151–10	.FUSE (15A-BL)	2					
33	5JJ–82151–30	.FUSE (10A-BL)	5					
34	5JJ–82151–50	.FUSE (3A-BL)	2					
35	5ND–82180–00	.CIRCUIT BREAKER ASSY	1					
36	5ND–82560–00	..THERMO SWITCH ASSY	1					
37	5DM–81950–00	RELAY ASSY (G8HN-1C4T-DJ-Y52)	1					
38	3C2–82309–00	WIRE, SUB LEAD	1					
39	3C2–82509–00	WIRE, SUB LEAD	1					
40	90464–51800	CLAMP	1					
41	90464–12830	CLAMP	1					
42	90464–40825	CLAMP	2					
43	90464–31827	CLAMP	4					
44	90464–40825	CLAMP	4					
45	90464–25800	CLAMP	2					
46	90464–40825	CLAMP	1					
47	90464–16006	CLAMP	2					
48	90464–25800	CLAMP	1					
49	90464–25800	CLAMP	2					
50	90464–48800	CLAMP	1					
51	90464–38800	CLAMP	1					
52	90464–51800	CLAMP	1					
53	90464–12830	CLAMP	1					
54	90464–31827	CLAMP	1					

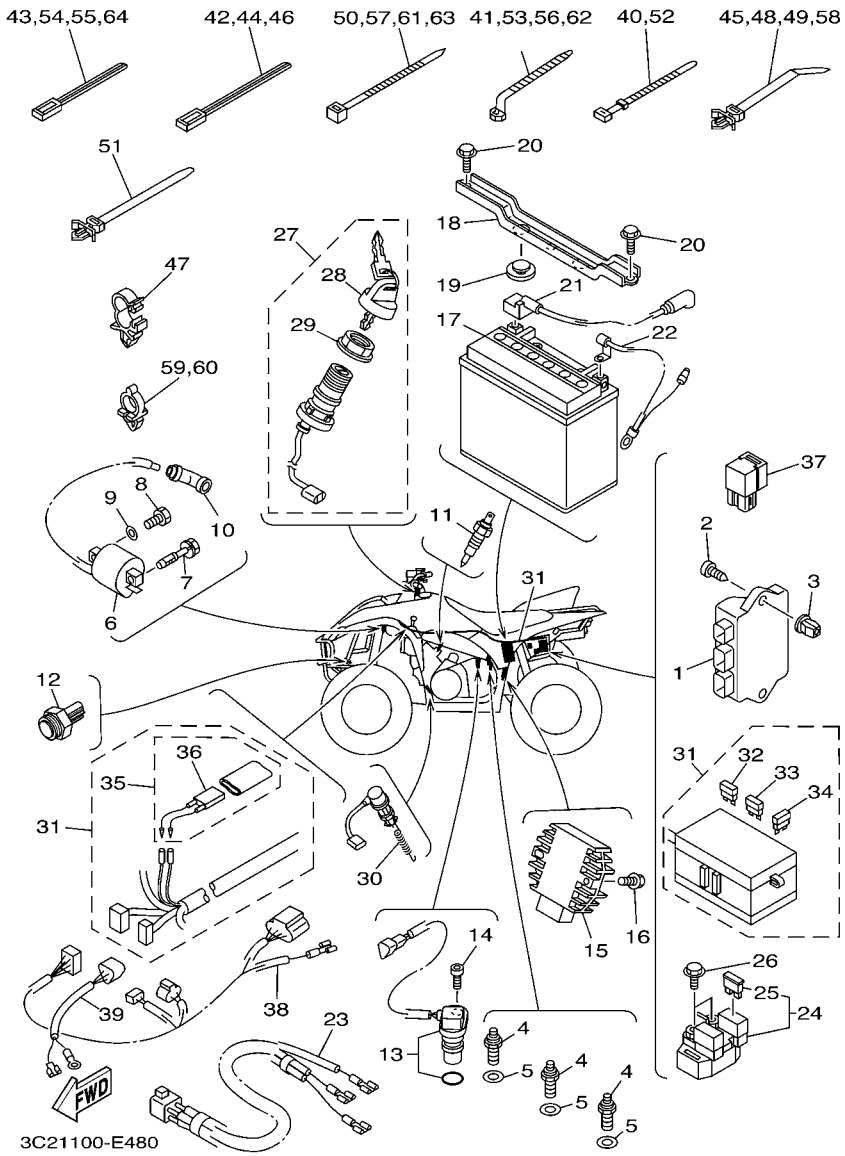

FIG. 47 ELECTRICAL 1

REF. NO.	PART NO.	DESCRIPTION	USA					REMARKS
55	90464–31827	CLAMP	2					
56	90464–12830	CLAMP	1					
57	90464–48800	CLAMP	1					
58	90464–25800	CLAMP	1					
59	90464–10833	CLAMP	1					
60	90464–10833	CLAMP	2					
61	90464–48800	CLAMP	1					
62	90464–12830	CLAMP	1					
63	90464–48800	CLAMP	1					
64	90464–31827	CLAMP	2					

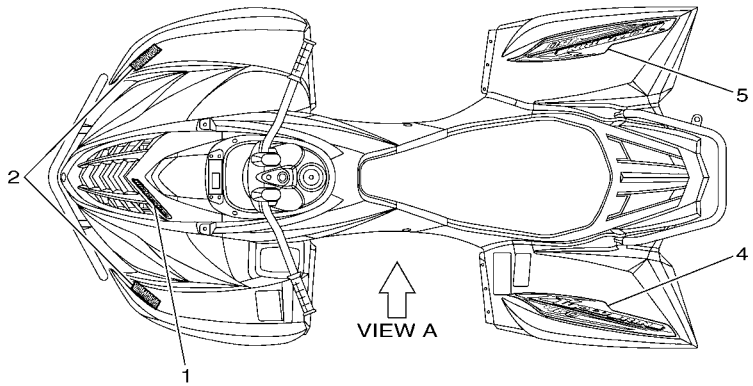

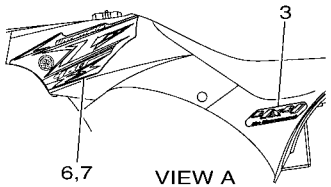

3C2G110-H480

FIG. 48 GRAPHICS

REF. NO.	PART NO.	DESCRIPTION	USA					REMARKS
1	3C2–F1565–40	EMBLEM, 2	1					
2	3C2–F153E–20	EMBLEM, YAMAHA	2					
3	3C2–F1609–30	EMBLEM	2					
4	3C2–F165G–40	GRAPHIC, REAR (LH)	1					
5	3C2–F165H–40	GRAPHIC, REAR (RH)	1					
6	3C2–F1781–80	EMBLEM 1	1					
7	3C2–F1782–80	EMBLEM 2	1					

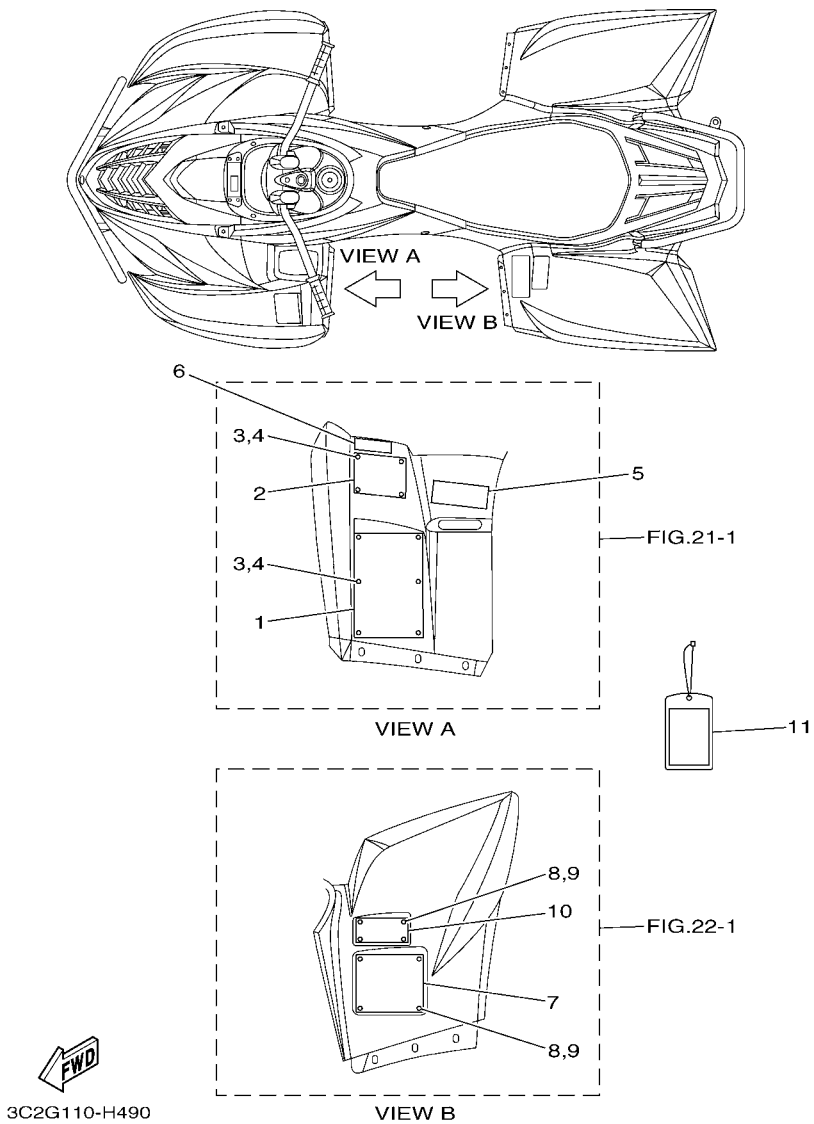

FIG. 49 EMBLEM & LABEL 1

REF. NO.	PART NO.	DESCRIPTION	USA					REMARKS
1	4XE–F1568–00	LABEL, WARNING	1					ENGLISH
2	1P0–F816L–00	LABEL, WARNING AGE	1					ENGLISH
3	4XE–F1539–10	RIVET	10					
4	4XE–F1549–00	WASHER, FENDER MOLD	10					
5	5ND–F151E–00	LABEL 2	1					ENGLISH
6	37S–F817J–00	PLATE, ANSI SVIA	1					
7	3C2–F816M–00	LABEL, WARNING TIRE & LOAD	1					
8	4XE–F1539–10	RIVET	8					
9	4XE–F1549–00	WASHER, FENDER MOLD	8					
10	3C2–F151H–00	LABEL 5	1					ENGLISH
11	3C2–F819R–10	TAG, WARNING	1					

PART NO.	REF. NO.
5GH–11110–00	1 – 1
5GH–1111F–00	1 – 25
3Y1–11133–11	1 – 2
4KB–11145–00	5 – 6
4WU–11160–01	1 – 14
4KB–11165–00	1 – 15
5GH–11181–00	1 – 7
2NL–11186–12	1 – 22
214–11198–01	12 – 9
	12 – 13
	25 – 14
	26 – 32
5ND–11310–00	2 – 1
5GH–11351–00	2 – 6
5ND–11400–00	3 – 1
5GH–11447–00	3 – 8
5ND–11500–00	3 – 18
5ND–11603–00	3 – 15
5ND–11605–00	3 – 15
5ND–11607–00	3 – 15
5ND–11631–00	3 – 14
3LD–11633–00	3 – 16
5ND–11636–00	3 – 14
5ND–11638–00	3 – 14
5GH–11651–01	3 – 7
5GH–11681–00	3 – 4
5GH–12111–00	4 – 1
22U–12113–00	4 – 4
1UY–12114–01	4 – 5
3Y1–12116–00	4 – 3
3Y1–12117–01	4 – 7
1J7–12118–00	4 – 8
5GH–12121–00	4 – 2
M01–12129–00	4 – 6
3GD–12151–00	4 – 9
3Y1–12156–00	4 – 10
31G–12158–00	4 – 13
31G–12159–02	4 – 12
5GH–12171–00	5 – 1
5GH–12176–10	5 – 2
31G–12210–01	5 – 12
3GD–12213–00	5 – 15
31G–12214–00	5 – 13
31G–12222–00	5 – 14
5GH–12231–10	5 – 10
5GH–12241–00	5 – 11
2TV–12411–00	7 – 9
5GH–12413–00	7 – 10

PART NO.	REF. NO.
5GH–12420–01	6 – 1
5GH–12421–01	6 – 3
5GH–12422–00	6 – 8
5GH–12428–00	6 – 9
11H–12438–10	6 – 6
5GH–12446–00	7 – 1
5CG–12450–00	6 – 2
5GH–12481–00	7 – 7
5GH–12484–00	7 – 4
4KB–13161–01	8 – 25
3Y1–13310–01	8 – 3
5GH–13314–00	8 – 2
1UY–13316–00	8 – 4
5GH–13324–00	8 – 19
5GH–13325–00	8 – 23
3GD–13329–00	8 – 8
1UY–13336–00	8 – 1
51Y–13411–00	8 – 13
2XK–13416–00	8 – 12
5GH–13440–20	8 – 17
5GH–13586–00	9 – 1
5GH–14103–01	10 – 39
5ND–14105–00	10 – 7
5UH–14107–20	10 – 14
5ND–1410A–00	10 – 21
5DM–14112–00	10 – 5
5DM–14141–40	10 – 16
4KM–14142–17	10 – 36
3H1–14147–00	10 – 9
522–14161–00	10 – 27
127–14186–00	10 – 13
3FV–14191–00	10 – 23
24W–14193–00	9 – 7
4KB–14193–20	10 – 19
5GH–14197–00	10 – 31
3DM–14216–00	10 – 43
4KM–14216–00	10 – 17
3G2–14231–14	10 – 22
1HX–14231–16	10 – 18
3G2–1423E–52	10 – 10
5GH–14261–00	10 – 11
31A–14419–00	9 – 24
5BF–1443E–00	13 – 25
	19 – 25
583–14561–00	10 – 12
5DM–14561–00	10 – 15
1FN–14565–00	10 – 29
3GD–14613–00	11 – 7

PART NO.	REF. NO.
5ND–1490H–00	10 – 37
5ND–1490J–10	10 – 2
5GH–14918–00	10 – 40
5GH–14918–10	10 – 6
5DM–14933–00	10 – 3
4XE–14937–00	10 – 41
5GH–14937–00	10 – 35
5GH–14940–10	10 – 4
256–14956–01	10 – 42
3H1–14962–00	10 – 8
5DM–14985–00	10 – 30
3C2–15100–02	12 – 1
5GH–15113–00	13 – 7
5GH–15163–00	12 – 21
5GH–15317–00	13 – 23
5GH–15333–00	12 – 28
5GH–15338–00	12 – 29
4HC–15351–00	8 – 15
5KM–15351–00	13 – 17
5GH–15362–00	12 – 10
2N4–15371–00	25 – 15
5GH–15379–00	13 – 15
4WV–15381–00	12 – 36
2K7–15383–00	12 – 16
11H–15383–02	17 – 3
5GH–15388–00	12 – 14
5GH–15411–01	13 – 1
5GH–15414–00	12 – 18
5ND–15431–00	13 – 14
5GH–15442–01	12 – 32
5GH–15451–00	13 – 2
5GH–15454–00	12 – 19
5GH–15463–00	12 – 22
3C2–15492–00	13 – 20
5GH–15512–00	14 – 1
5GH–15517–10	14 – 6
4KB–15522–01	14 – 2
1UY–15590–01	14 – 8
21V–15719–00	13 – 10
3GD–15777–10	13 – 42
5GH–16611–10	15 – 1
5GH–16620–00	15 – 2
5GH–16626–00	15 – 3
5GH–16664–00	15 – 4
5GH–17223–00	16 – 9
1P1–17285–00	16 – 13
1P1–17402–00	16 – 7
5GH–17453–10	16 – 14

PART NO.	REF. NO.
5GH–17473–00	16 – 18
5GH–17521–00	17 – 1
5ND–17523–00	16 – 23
4VR–17527–00	17 – 22
4WV–17530–10	17 – 8
5GH–17531–00	17 – 18
52G–17531–01	17 – 5
5GH–17531–10	17 – 18
52G–17531–11	17 – 5
5GH–17531–20	17 – 18
52G–17531–21	17 – 5
5GH–17531–30	17 – 18
52G–17531–31	17 – 5
5GH–17531–40	17 – 18
52G–17531–41	17 – 5
5GH–17531–50	17 – 18
52G–17531–51	17 – 5
5GH–17531–60	17 – 18
5GH–17551–00	17 – 9
5UH–17556–10	17 – 14
5GH–17582–00	16 – 8
5GH–17583–00	16 – 25
5UH–17585–00	17 – 23
5GH–17606–00	15 – 9
5UH–17611–00	15 – 22
5UH–1761A–00	17 – 26
5GH–17620–00	15 – 10
5GH–17623–00	15 – 13
5GH–17632–00	15 – 12
5GH–17639–00	15 – 17
3C2–17641–00	15 – 21
4WV–17644–00	15 – 32
4WV–17653–00	15 – 14
4WV–17654–01	15 – 15
5GH–17660–10	15 – 25
4CW–17664–00	15 – 29
5GH–17670–00	15 – 26
5TE–17681–00	16 – 1
4WV–17684–00	15 – 31
5GH–18104–00	19 – 10
3C2–18115–00	19 – 17
5GH–18129–01	19 – 11
5GH–1812E–00	18 – 13
5GH–18131–00	19 – 23
5GH–18146–00	19 – 12
5GH–18148–00	18 – 12
1P1–18174–00	19 – 21
5KM–18191–00	19 – 7

PART NO.	REF. NO.
5GH–18197–00	19 – 8
4SH–18198–00	19 – 1
1P1–18300–01	19 – 20
5GH–18318–00	26 – 11
5GH–18319–00	26 – 15
1D9–18511–00	18 – 4
5GH–18514–01	26 – 13
4KB–18531–01	18 – 5
1P1–18540–00	18 – 1
5GH–18617–00	19 – 24
37S–2177C–00	9 – 26
1AA–21815–00	23 – 2
1AA–21874–00	23 – 3
1W1–22128–00	27 – 5
4GY–22898–50	35 – 11
2HR–23526–00	28 – 11
1UY–23812–00	29 – 6
8K1–23814–00	29 – 3
2GU–23872–00	20 – 22
1UY–23894–01	29 – 10
4EW–2412F–00	30 – 23
3C2–24311–00	30 – 19
3C2–24500–00	30 – 3
4X8–24512–00	30 – 6
3AC–24523–00	30 – 7
3HE–24524–00	30 – 8
3AJ–24534–01	30 – 4
5KM–24610–00	30 – 2
5GH–2510G–00	32 – 8
	32 – 37
3HN–2510H–00	32 – 9
	32 – 38
5GH–2510J–00	32 – 10
	32 – 39
3HN–2511G–01	32 – 11
	32 – 40
3HN–2511H–00	32 – 12
	32 – 41
5GT–2512A–00	32 – 5
	32 – 34
	34 – 22
3HN–2512G–01	32 – 13
	32 – 42
4KB–2512H–00	32 – 15
	32 – 44
2HR–2512J–00	32 – 14
	32 – 43
4SH–25367–01	34 – 11

PART NO.	REF. NO.
3GD–2580T–00	33 – 5
3GD–2580U–00	33 – 12
3C2–2580V–00	35 – 4
3GD–25827–00	33 – 10
3GD–25828–00	33 – 17
5GH–25828–00	35 – 12
31A–2582A–50	39 – 3
5KM–2583T–01	37 – 1
5KM–2583V–00	39 – 1
5GH–25844–00	39 – 21
4PX–25852–00	39 – 14
5JX–25852–01	37 – 4
2VN–25854–00	39 – 15
4L0–25854–00	37 – 3
2VN–25855–00	39 – 16
2GU–25866–00	37 – 13
5GH–25867–00	37 – 6
2VN–25894–00	39 – 13
1FK–2589F–00	37 – 11
3GM–2589H–00	39 – 5
4GY–25919–50	35 – 7
5GH–25924–00	35 – 10
3GD–25933–00	33 – 11
	33 – 18
1NV–26129–00	36 – 13
1P1–26250–00	36 – 4
1NV–26259–01	36 – 10
1NV–2625G–01	36 – 14
1NV–2625K–00	36 – 11
4KB–2628F–10	36 – 5
4KB–2628G–00	36 – 6
1NV–26304–00	36 – 9
5GH–26311–10	36 – 23
5EB–26332–00	37 – 7
3C2–26341–10	39 – 25
5GH–2637F–10	39 – 29
1NV–26398–00	36 – 8
109–27114–00	24 – 12
4SS–27218–00	39 – 6
2YK–27222–00	39 – 7
1NV–2811A–01	20 – 44
3HN–46108–01	25 – 32
4WV–46119–01	26 – 5
4WV–46119–11	26 – 5
4WV–46119–21	26 – 5
4WV–46119–31	26 – 5
4WV–46119–41	26 – 5
4WV–46119–51	26 – 5

PART NO.	REF. NO.
5GH–46123–00	26 – 36
29U–46125–00	25 – 10
5GH–46126–01	26 – 27
4WV–46132–00	26 – 19
5GH–46136–00	26 – 38
5KM–46137–00	26 – 39
5GH–46141–01	26 – 4
4WV–46143–00	26 – 10
4WV–46155–00	26 – 7
4WV–46159–00	26 – 9
5GH–46160–05	26 – 1
5GH–46161–01	26 – 2
5GH–46162–01	26 – 3
3B4–46163–00	26 – 23
5TE–46163–00	26 – 29
4WV–46165–00	26 – 16
4WV–46167–00	26 – 17
5GH–4616A–02	26 – 12
2HR–46187–00	25 – 35
4WV–46441–00	26 – 14
5GH–46470–04	26 – 6
5ND–81410–00	41 – 1
5GH–81450–01	41 – 2
3AJ–81801–00	42 – 5
5ND–81815–01	42 – 7
3AJ–81826–00	42 – 4
4XV–8182A–00	42 – 6
	42 – 8
11H–81844–00	42 – 3
1FK–81847–00	42 – 2
5KM–81890–00	42 – 1
4SV–81940–12	47 – 24
5DM–81950–00	47 – 37
5GT–81960–00	47 – 15
371–82121–00	47 – 19
1AE–82151–00	47 – 25
5JJ–82151–10	47 – 32
5JJ–82151–30	47 – 33
5JJ–82151–50	47 – 34
5ND–82180–00	47 – 35
3C2–82309–00	47 – 38
3KJ–82310–10	47 – 6
1UY–82370–20	47 – 10
3C2–82509–00	47 – 39
5ND–82510–00	47 – 27
4KB–82530–10	47 – 30
3GB–82540–01	47 – 4
3GD–82540–11	26 – 18

PART NO.	REF. NO.
1P1–82541–00	47 – 23
5KM–82560–00	47 – 11
5ND–82560–00	47 – 36
5ND–82560–10	47 – 12
3HN–82569–00	47 – 29
3HN–82579–00	47 – 28
3C2–82590–00	47 – 31
1YW–82911–02	46 – 1
2XJ–82913–00	46 – 2
4V4–82913–00	36 – 20
5KM–82917–00	46 – 7
3C2–83500–00	43 – 1
3C2–83755–00	47 – 13
1UY–83909–00	46 – 12
2HT–83912–00	46 – 3
5KM–83922–00	37 – 8
5GH–83941–00	46 – 11
3L4–83943–00	46 – 13
5LP–83973–01	46 – 10
1P1–83976–00	36 – 19
5LP–83980–00	37 – 10
5TG–84110–03	44 – 2
5TG–84140–01	44 – 4
5TG–84165–01	44 – 3
5TG–84166–01	44 – 11
5TG–84310–03	44 – 10
4KB–84314–01	44 – 1
	44 – 9
5TG–84340–01	44 – 12
5LP–84700–11	45 – 1
256–84714–60	45 – 2
4TR–84723–00	45 – 3
4TR–84733–00	45 – 4
3C2–85540–00	47 – 1
3C2–E1166–00	1 – 19
5ND–E2405–01	7 – 14
3C2–E2460–00	7 – 12
3C2–E2461–00	7 – 13
5ND–E2462–00	7 – 15
3C2–E2482–00	7 – 24
3C2–E2483–00	7 – 25
5ND–E2535–00	7 – 17
5ND–E2675–00	7 – 16
3C2–E2692–00	13 – 29
5ND–E4101–11	10 – 1
5FU–E4147–00	10 – 25
5FU–E4155–00	10 – 38
5UH–E4191–00	9 – 17

PART NO.	REF. NO.
5ND–E4349–00	9 – 6
5UH–E4411–00	9 – 9
5UH–E4412–00	9 – 13
5UH–E4424–00	9 – 15
5ND–E442F–00	9 – 19
5ND–E4437–02	9 – 21
5UH–E4438–00	9 – 18
5UH–E4451–10	9 – 12
5ND–E4453–00	9 – 20
5UH–E4458–00	9 – 10
5UH–E4462–00	9 – 14
5UH–E4468–00	9 – 11
5ND–E4611–00	11 – 1
5ND–E4628–00	11 – 2
5ND–E4711–00	11 – 8
5ND–E4714–00	11 – 18
5ND–E4715–00	11 – 15
5ND–E4718–00	11 – 11
5ND–E4719–00	11 – 10
5ND–E4728–00	11 – 13
5ND–E4737–00	11 – 22
3C2–E4752–00	11 – 9
5ND–E4759–00	11 – 17
5UH–E4769–10	9 – 16
5ND–E4777–00	11 – 16
5ND–E477K–02	11 – 4
3C2–E4787–00	11 – 19
5ND–E4788–00	11 – 12
5ND–E5336–00	13 – 22
	20 – 3
	20 – 9
	20 – 15
5ND–E5413–00	13 – 40
5ND–E5423–00	13 – 37
3C2–E5471–00	13 – 24
3C2–E5472–00	13 – 28
5ND–E5472–00	13 – 27
5ND–E5473–00	13 – 32
5ND–E5474–00	13 – 33
4XE–E7537–15	25 – 25
4XE–E7537–30	25 – 25
4XE–E7537–40	25 – 25
4XE–E7537–45	25 – 25
4XE–E7537–50	25 – 25
4XE–E7537–60	25 – 25
3C2–F1110–00	20 – 1
5FU–F111A–00	20 – 35
3C2–F1228–00	20 – 36

PART NO.	REF. NO.
5ND–F1315–01	20 – 2
5ND–F1316–01	20 – 8
3C2–F142M–00	7 – 18
3C2–F142N–00	7 – 19
3C2–F1446–01	20 – 29
5ND–F147A–02	20 – 45
5ND–F1486–00	20 – 7
	20 – 12
5ND–F1488–00	20 – 16
3C2–F1500–90	21 – 1
5ND–F151E–00	49 – 5
3C2–F151H–00	49 – 10
4XE–F1539–10	49 – 3
	49 – 8
3C2–F153E–20	48 – 2
4XE–F1549–00	49 – 4
	49 – 9
3C2–F1556–A0	21 – 5
3C2–F1565–40	48 – 1
4XE–F1568–00	49 – 1
5ND–F1585–01	20 – 30
3C2–F1600–90	22 – 1
3C2–F1609–30	48 – 3
3C2–F163A–00	22 – 4
5ND–F163E–00	22 – 5
5ND–F163F–00	22 – 8
5ND–F1652–00	22 – 6
3C2–F165G–40	48 – 4
3C2–F165H–40	48 – 5
3C2–F171A–30	23 – 7
5FU–F174A–02	22 – 7
3C2–F1781–80	48 – 6
3C2–F1782–80	48 – 7
3C2–F1823–00	13 – 30
	13 – 31
5ND–F1871–00	23 – 1
3C2–F2110–00	24 – 1
5ND–F2123–00	24 – 5
5ND–F2189–00	24 – 8
4XE–F219X–01	24 – 11
3C2–F2210–00	27 – 1
4S2–F2327–00	32 – 62
4S2–F2328–00	32 – 63
5ND–F2825–00	20 – 32
17S–F3123–00	28 – 17
17S–F3133–00	28 – 18
5ND–F3192–01	37 – 18
3C2–F3350–00	28 – 14

PART NO.	REF. NO.
5ND–F3501–10	32 – 17
5ND–F3502–10	32 – 46
5ND–F3540–12	28 – 1
5FU–F3549–00	28 – 2
	28 – 5
	32 – 22
	32 – 51
5ND–F3550–12	28 – 4
5ND–F357A–01	28 – 9
5ND–F358A–01	28 – 10
3C2–F3813–00	29 – 1
5ND–F3816–12	29 – 2
5ND–F3831–00	29 – 15
4XE–F3833–00	29 – 18
4XE–F3834–00	29 – 19
1D9–F3841–01	29 – 16
5ND–F3845–01	29 – 17
5ND–F3868–00	29 – 8
3C2–F4110–10	30 – 1
3C2–F4144–00	20 – 42
3C2–F414H–00	30 – 22
3C2–F4710–00	31 – 1
3C2–F4731–00	31 – 2
4XE–F4747–00	31 – 3
3C2–F4776–00	31 – 5
4XE–F478V–00	31 – 4
5TE–F510F–00	32 – 7
	32 – 36
5ND–F5111–21	32 – 24
	32 – 53
5ND–F514A–00	32 – 59
3C2–F5180–10	32 – 1
	32 – 30
5TE–F518F–00	32 – 6
	32 – 35
5ND–F5381–01	34 – 17
5ND–F5383–11	34 – 8
3C2–F5390–10	34 – 1
	34 – 4
1P0–F5411–00	34 – 9
5ND–F5712–10	35 – 1
5ND–F5718–00	34 – 25
5ND–F582T–00	33 – 1
	33 – 3
5ND–F5831–10	35 – 2
5ND–F5871–00	37 – 15
3C2–F5872–01	37 – 12
5ND–F5873–01	37 – 14

PART NO.	REF. NO.
5ND–F5874–01	39 – 18
5ND–F5875–01	37 – 16
3C2–F5895–00	39 – 22
3C2–F6111–00	36 – 1
5ND–F6124–00	36 – 3
5FU–F6241–10	36 – 2
3C2–F6331–00	36 – 24
5ND–F637G–00	39 – 8
5ND–F7211–10	38 – 5
5ND–F7252–11	38 – 6
5ND–F7412–11	38 – 3
3C2–F741A–00	38 – 13
5ND–F7445–00	38 – 12
3C2–F7453–00	38 – 10
3C2–F7463–00	38 – 11
3C2–F7471–00	38 – 1
5ND–F7491–00	39 – 30
5ND–F8100–00	20 – 43
1P0–F816L–00	49 – 2
3C2–F816M–00	49 – 7
37S–F817J–00	49 – 6
3C2–F819R–10	49 – 11
3C2–F8309–00	21 – 3
3C2–F831V–00	20 – 26
3C2–F832V–00	20 – 27
3C2–F836B–00	21 – 4
3C2–F845N–00	40 – 1
3C2–F845R–00	40 – 3
5ND–G6101–03	25 – 1
4XE–G6102–00	25 – 4
4XE–G6117–25	25 – 27
4XE–G6117–30	25 – 27
4XE–G6117–35	25 – 27
4XE–G6117–40	25 – 27
4XE–G6117–45	25 – 27
4XE–G6117–50	25 – 27
4XE–G6118–10	25 – 26
4XE–G6118–11	25 – 26
4XE–G6118–12	25 – 26
4XE–G6118–13	25 – 26
4XE–G6118–14	25 – 26
4XE–G6118–15	25 – 26
4XE–G6118–16	25 – 26
4XE–G6118–17	25 – 26
4XE–G6118–18	25 – 26
4XE–G6118–19	25 – 26
4XE–G6118–20	25 – 26
4XE–G6118–21	25 – 26

PART NO.	REF. NO.
5ND–G6151–01	25 – 2
5ND–G6152–00	25 – 16
5FU–G6156–00	25 – 23
5FU–G6157–10	25 – 28
5FU–G6157–15	25 – 28
5FU–G6157–20	25 – 28
5FU–G6157–30	25 – 28
5FU–G6157–40	25 – 28
5FU–G6157–50	25 – 28
5ND–G6172–10	25 – 30
5TE–G6173–10	26 – 35
5ND–G6540–13	24 – 2
5FU–H2100–20	47 – 17
3C2–H2115–00	47 – 21
5ND–H2116–00	47 – 22
5ND–H2128–01	47 – 18
3C2–K7173–00	20 – 39
JJ3–K818M–00	20 – 41
8CR–W0041–00	37 – 2
5KM–W0042–50	39 – 2
3GD–W0045–00	33 – 9
	33 – 16
3C2–W0046–00	35 – 9
3GD–W0047–00	33 – 7
	33 – 14
	35 – 6
1UY–W0048–50	33 – 8
	33 – 15
	35 – 8
3GD–W0057–00	33 – 6
	33 – 13
3TB–W0057–00	35 – 5
5ND–W1141–00	3 – 2
5ND–W1142–00	3 – 3
5GT–Y4612–00	25 – 7
90101–06053	44 – 7
	44 – 15
90101–10016	5 – 4
90101–10017	3 – 11
90105–06048	39 – 17
90105–06086	6 – 10
90105–06176	19 – 15
90105–08150	17 – 7
90105–08161	33 – 19
	35 – 13
90105–10051	20 – 23
90105–10136	1 – 11
90105–10137	1 – 10

PART NO.	REF. NO.
90105–10267	28 – 12
90105–10284	20 – 13
	20 – 17
90105–10287	34 – 23
90105–10841	28 – 16
90105–12057	24 – 6
90105–12803	27 – 2
90105–14003	18 – 10
90109–06172	20 – 40
	20 – 46
90109–06262	38 – 15
90109–06799	46 – 4
90109–06865	47 – 7
90109–08076	21 – 2
90109–08082	33 – 2
	33 – 4
90109–081F0	35 – 3
90110–05201	21 – 7
	23 – 8
90110–06001	47 – 14
90110–06007	23 – 10
90110–06189	7 – 3
90113–08004	26 – 21
90114–10014	32 – 25
	32 – 54
90116–10593	25 – 3
90119–06157	22 – 3
	23 – 5
90119–06246	9 – 27
90119–06883	30 – 14
	30 – 18
90123–08046	46 – 8
90149–04278	36 – 15
90149–05299	38 – 16
90149–06108	30 – 11
90149–06280	20 – 38
90149–08013	17 – 4
90151–05023	13 – 11
90151–06010	30 – 24
90151–06023	12 – 17
90153–06002	2 – 7
90157–04006	15 – 18
90160–05007	32 – 61
90170–08358	19 – 18
90170–14284	8 – 22
90170–36279	15 – 33
90171–12001	28 – 7
	29 – 20

PART NO.	REF. NO.
90171–16002	32 – 28
	32 – 57
	34 – 20
90179–08148	46 – 9
90179–08410	11 – 6
90179–10020	32 – 4
	32 – 33
	34 – 7
	34 – 15
90179–16005	15 – 24
	15 – 34
90179–16006	17 – 16
90179–22005	15 – 8
90179–22015	17 – 6
90179–55660	17 – 29
90179–65305	17 – 11
90183–050A0	43 – 2
90183–050A8	21 – 6
	23 – 9
90183–06053	28 – 19
90185–10012	28 – 13
	28 – 15
90185–12009	27 – 3
90185–14009	29 – 13
90201–047R9	15 – 19
90201–05042	38 – 17
90201–06036	19 – 5
	19 – 16
90201–06042	39 – 27
90201–06060	18 – 17
90201–06078	44 – 8
	44 – 16
90201–06090	30 – 16
90201–08066	39 – 11
90201–08070	9 – 4
90201–10035	20 – 25
	34 – 24
90201–10036	25 – 39
90201–10038	3 – 10
90201–10056	11 – 21
90201–10118	37 – 21
	39 – 20
90201–10128	1 – 12
90201–10591	5 – 5
90201–114P2	8 – 10
90201–12049	27 – 6
90201–123K4	14 – 4
90201–132G5	19 – 3

PART NO.	REF. NO.
90201–14021	29 – 12
90201–14023	38 – 8
90201–15564	18 – 7
90201–166R6	17 – 15
90201–16804	32 – 27
	32 – 56
	34 – 19
90201–190T7	15 – 23
90201–20278	16 – 15
90201–250R9	16 – 11
90201–25291	14 – 7
90201–356K1	3 – 6
90202–05193	30 – 10
90215–06003	1 – 27
90215–14205	8 – 21
90240–06076	39 – 26
90240–08013	39 – 10
90240–12092	27 – 4
90267–489U9	38 – 14
90269–05055	19 – 22
90269–06800	13 – 35
90269–08813	13 – 36
90280–05048	3 – 9
90282–05013	8 – 20
90336–28053	29 – 5
90338–08226	47 – 3
90338–09801	22 – 2
90340–10001	26 – 24
90340–14002	12 – 8
90340–14029	12 – 12
	25 – 24
	26 – 31
90340–14046	25 – 13
90340–14117	13 – 12
90340–18003	12 – 6
90387–0613B	19 – 2
90387–066J1	30 – 13
90387–072Y2	7 – 23
90387–07391	45 – 8
90387–07598	30 – 17
	44 – 6
	44 – 14
90387–090R0	29 – 11
90387–10636	11 – 23
90387–16547	2 – 3
90387–1914K	15 – 20
90387–252R2	17 – 28
90387–255H9	25 – 9

PART NO.	REF. NO.
90387–26001	16 – 4
90401–06001	1 – 4
90401–08006	8 – 27
90401–10015	37 – 20
	39 – 19
90401–20145	8 – 18
90430–06014	2 – 8
	6 – 12
90430–06192	1 – 5
90430–08119	8 – 26
90430–10003	26 – 25
90430–10148	47 – 5
90430–14194	18 – 11
90430–14240	1 – 9
90430–18130	12 – 7
90445–070J5	26 – 33
90445–07810	25 – 40
90445–081K8	23 – 4
90445–088C5	30 – 21
90446–06001	6 – 13
90450–32015	7 – 8
90450–47002	9 – 5
90450–56008	9 – 25
90450–58002	9 – 22
	9 – 23
90450–64002	13 – 34
90460–85277	24 – 10
90464–10833	47 – 59
	47 – 60
90464–12830	47 – 41
	47 – 53
	47 – 56
	47 – 62
90464–16006	47 – 47
90464–25800	47 – 45
	47 – 48
	47 – 49
	47 – 58
90464–31827	47 – 43
	47 – 54
	47 – 55
	47 – 64
90464–38800	47 – 51
90464–39800	1 – 21
90464–40825	47 – 42
	47 – 44
	47 – 46
90464–48800	47 – 50

PART NO.	REF. NO.
90464–48800	47 – 57
	47 – 61
	47 – 63
90464–51800	47 – 40
	47 – 52
90465–08127	13 – 5
90465–08336	19 – 14
90467–06194	6 – 14
90467–07029	25 – 41
	26 – 34
90467–08003	23 – 6
90467–100A1	30 – 20
90467–11044	39 – 24
90467–140A4	1 – 20
90467–140A5	39 – 23
90467–150A2	19 – 26
90467–160A4	13 – 26
90467–26800	7 – 26
90468–18121	7 – 27
90480–01400	30 – 15
90480–10517	20 – 34
90480–13004	20 – 37
90480–13018	13 – 16
90480–13398	13 – 41
90480–14102	44 – 5
	44 – 13
90480–14555	45 – 7
90480–15235	7 – 21
90480–18290	30 – 12
90501–10353	18 – 9
90501–160A1	18 – 6
90501–18576	8 – 14
90501–296L7	26 – 37
90501–626L9	15 – 30
90501–650L5	17 – 21
90506–07135	24 – 9
90506–12441	38 – 9
90508–235B7	18 – 15
90508–35764	19 – 4
90560–30325	32 – 21
	32 – 50
91312–05012	41 – 5
91312–06012	7 – 6
91312–06020	1 – 24
	7 – 11
91312–06025	1 – 18
91312–06140	1 – 13
91312–08016	14 – 9

PART NO.	REF. NO.
91312–08025	9 – 3
91317–08020	26 – 8
91402–16012	39 – 12
91402–20012	39 – 28
91402–20025	29 – 14
91402–25020	28 – 8
	29 – 21
91402–30025	27 – 7
91402–30030	32 – 29
	32 – 58
	34 – 21
91810–20001	12 – 33
91A20–07010	9 – 8
92012–06012	34 – 26
92014–05014	43 – 3
92502–06030	41 – 3
92902–04100	10 – 33
92902–05600	36 – 22
92902–06600	5 – 18
	12 – 31
	41 – 4
	47 – 9
92902–08600	17 – 20
	25 – 21
92907–04600	10 – 34
92907–05100	46 – 15
93101–10090	6 – 5
93101–12168	12 – 35
93101–31167	15 – 11
93101–35097	17 – 13
93101–38098	25 – 12
93101–52116	25 – 5
93102–15212	18 – 3
93102–25081	20 – 20
93102–25099	20 – 21
93102–28476	13 – 9
93102–30170	17 – 25
93102–32483	12 – 26
93102–35380	17 – 30
93102–42004	16 – 6
93102–65386	25 – 17
93104–09025	36 – 12
93104–41119	15 – 27
93106–38046	32 – 19
	32 – 48
	34 – 14
93106–38047	32 – 20
	32 – 49

PART NO.	REF. NO.
93106–47040	34 – 12
93112–31011	29 – 7
93210–09165	4 – 11
93210–11073	19 – 9
93210–14369	13 – 13
93210–15620	39 – 4
93210–16290	3 – 12
93210–18322	2 – 4
93210–18417	7 – 5
93210–19026	12 – 11
93210–26001	16 – 5
93210–27666	32 – 26
	32 – 55
	34 – 18
93210–33133	6 – 15
93210–33786	7 – 2
93210–35520	8 – 16
93210–44545	9 – 2
	15 – 28
93210–50768	26 – 20
93210–57634	1 – 23
93210–59531	25 – 11
93210–76800	25 – 29
93210–78544	17 – 17
93210–89447	2 – 2
93211–06635	1 – 17
93211–40040	26 – 22
93211–51749	25 – 19
93211–52001	15 – 16
93306–00006	6 – 4
93306–00208	18 – 2
93306–00415	16 – 2
93306–00438	5 – 7
93306–00515	5 – 8
93306–00612	17 – 24
93306–006Y2	32 – 18
	32 – 47
	34 – 13
93306–008Y0	34 – 10
93306–07801	13 – 8
93306–20120	12 – 34
93306–203YN	20 – 19
93306–20464	16 – 21
93306–20582	17 – 27
93306–20601	16 – 3
93306–20622	17 – 2
93306–20715	17 – 12
93306–30201	16 – 20

PART NO.	REF. NO.
93306–30315	3 – 19
93306–30438	3 – 20
93306–30538	17 – 10
93306–305Y6	25 – 8
93306–30629	3 – 13
93310–212R6	14 – 3
93310–32590	16 – 10
93310–420F2	16 – 16
93310–635D4	3 – 5
93311–42077	16 – 26
93315–21813	15 – 6
93316–00801	26 – 30
93316–01003	12 – 25
93316–013Y0	25 – 18
93317–855Y9	25 – 6
93399–99926	25 – 33
	25 – 36
93410–20038	16 – 17
93410–22039	25 – 31
93410–32826	28 – 3
	28 – 6
93410–46079	15 – 5
93430–10015	38 – 7
93440–12052	1 – 3
93440–20088	25 – 34
	25 – 37
93440–25084	16 – 12
	16 – 19
	16 – 24
93450–22027	3 – 17
93450–22119	32 – 16
	32 – 45
93450–24062	15 – 7
93450–44141	26 – 26
93450–71142	26 – 28
93503–08007	18 – 8
93603–07073	8 – 6
93603–12030	8 – 5
93604–10011	5 – 3
93900–00813	32 – 3
	32 – 32
	34 – 3
	34 – 6
94108–12814	32 – 2
	32 – 31
94110–12811	34 – 2
	34 – 5
94582–20116	5 – 9

PART NO.	REF. NO.
94591–54038	16 – 22
94701–00333	1 – 28
95022–06008	47 – 26
95022–06012	1 – 16
	6 – 11
	12 – 37
95022–06014	13 – 38
	18 – 16
95022–06016	18 – 14
95022–06025	5 – 16
	13 – 21
95022–06030	13 – 6
	42 – 9
95022–06035	13 – 39
95022–06040	12 – 3
	12 – 24
	13 – 4
95022–06050	6 – 17
95022–06060	6 – 16
95022–06065	12 – 4
	12 – 5
95302–06600	45 – 6
95302–08700	19 – 19
95307–05700	36 – 16
95602–10200	20 – 6
	20 – 14
	20 – 18
	20 – 24
95602–12200	24 – 7
95606–06100	37 – 9
95607–05100	36 – 7
95607–06100	46 – 5
95617–08620	1 – 6
95702–05300	38 – 18
95702–10500	24 – 4
	25 – 38
95802–06012	28 – 20
95802–06020	47 – 16
	47 – 20
95802–06025	7 – 22
	37 – 22
95802–08012	24 – 13
95812–06010	20 – 33
95812–06014	7 – 20
95812–06016	11 – 5
95812–06035	19 – 6
95812–08012	20 – 4
	20 – 10

PART NO.	REF. NO.
95812–08012	38 – 2
	38 – 4
	40 – 2
	40 – 4
95812–08025	20 – 28
	39 – 9
95812–08030	29 – 4
95812–10020	24 – 3
95812–10025	25 – 22
95812–10080	20 – 11
95812–10110	20 – 5
9581P–06008	11 – 3
	11 – 14
95822–06012	12 – 15
	32 – 60
	37 – 17
	37 – 19
	39 – 31
95822–06035	13 – 18
95822–06045	13 – 19
95822–08020	20 – 31
95822–10040	11 – 20
97002–06012	1 – 26
97002–06020	47 – 8
97012–06016	12 – 30
97022–06016	5 – 17
97022–08025	25 – 20
97022–08030	17 – 19
97022–08060	29 – 9
97080–06020	19 – 13
97607–04210	36 – 18
97607–06120	46 – 6
97702–40620	45 – 5
97702–60420	47 – 2
98501–04014	10 – 32
98502–05020	36 – 21
98507–03008	30 – 5
98507–04008	10 – 28
98507–04014	10 – 26
98507–05020	36 – 17
98507–05030	46 – 16
9850L–04006	10 – 24
98517–05012	46 – 14
98580–04010	10 – 20
98702–04018	30 – 9
98702–06020	8 – 7
	12 – 20
98702–06030	8 – 11

PART NO.	REF. NO.
98706–04012	37 – 5
99009–10400	6 – 7
99009–11400	8 – 9
	8 – 24
99009–12400	14 – 5
99009–32400	32 – 23
	32 – 52
99009–55500	34 – 16
99009–80500	12 – 27
99530–10114	12 – 2
	12 – 23
	13 – 3
99530–14016	1 – 8
	2 – 5